NORDMANN
ENGINEERING

Nordmann AT4

Steam humidifier

MOUNTING INSTRUCTIONS

2559419-C EN 2006

Thank you for choosing Nordmann

Installation date (MM/DD/YYYY):
Commissioning date (MM/DD/YYYY):
Site:
Model:
Serial number:

Proprietary Notice

This document and the information disclosed herein are proprietary data of Condair Group AG. Neither this document, nor the information contained herein shall be reproduced, used, or disclosed to others without the written authorisation of Condair Group AG, except to the extent required for installation or maintenance of recipient's equipment.

Liability Notice

Condair Group AG does not accept any liability due to incorrect installation or operation of the equipment or due to the use of parts/components/equipment that are not authorised by Condair Group AG.

Copyright Notice

© Condair Group AG, All rights reserved.

Technical modifications reserved.

Contents

1	**Introduction**	**4**
1.1	To the very beginning	4
1.2	Notes on the mounting instructions	4
2	**For your safety**	**6**
3	**Product Overview**	**8**
3.1	Models overview	8
3.2	Identification of the unit	9
3.3	Steam humidifier construction	10
3.4	Functional description	11
3.5	Humidification system overview	13
3.6	Options	17
3.7	Accessories	18
3.7.1	Accessories overview	18
3.7.2	Accessory details	19
3.8	Standard delivery	22
3.9	Storing/Transportation/Packaging	22
4	**Notes for the planning engineer**	**23**
4.1	Selecting the unit version	23
4.1.1	Calculating the maximum required steam capacity	23
4.1.2	Selecting the unit	24
4.2	Selecting the options an accessories	24
4.3	Selecting the control system	25
5	**Mounting and installation work**	**27**
5.1	Important notes for mounting and installation work	27
5.2	Installation overviews	28
5.3	Mounting the unit	30
5.3.1	Notes on locating the unit	30
5.3.2	Mounting the humidifier	32
5.3.3	Inspecting the installed unit	33
5.4	Steam installation	34
5.4.1	Overview steam installation	34
5.4.2	Positioning of the steam distribution pipes	35
5.4.3	Installing the steam distributors	39
5.4.4	Positioning and mounting of the fan units FAN4 N...	40
5.4.5	Installing the steam and condensate hose	41
5.4.6	Common steam and condensate line errors	45
5.4.7	Inspecting the steam installation	46
5.5	Water installation	47
5.5.1	Overview water installation	47
5.5.2	Notes on water installation	48
5.5.3	Inspecting the water installation	49
5.6	Electric installation	50
5.6.1	Wiring diagram Nordmann AT4 single units	50
5.6.2	Wiring diagram Nordmann AT4 double units	51
5.6.3	Notes on electric installation	52
5.6.4	Inspecting the electrical installation	59
6	**Product specifications**	**60**
6.1	Technical data	60
6.2	Unit dimensions	61

1 Introduction

1.1 To the very beginning

We thank you for having purchased the **steam humidifier Nordmann AT4**.

The steam humidifier Nordmann AT4 incorporates the latest technical advances and meets all recognized safety standards. Nevertheless, improper use of the Nordmann AT4 may result in danger to the user or third parties and/or impairment of material assets.

To ensure a safe, proper, and economical operation of the steam humidifier Nordmann AT4, please observe and comply with all information and safety instructions contained in the present mounting instructions.

If you have questions, which are not or insufficiently answered in this documentation, please contact your Nordmann supplier. They will be glad to assist you.

1.2 Notes on the mounting instructions

Limitation

The subject of these mounting instructions is the steam humidifier Nordmann AT4. The various accessories are only described insofar as this is necessary for proper operation of the equipment. Further information on accessories can be obtained in the respective instructions.

These mounting instructions are restricted to the **installation** of the steam humidifier Nordmann AT4 and is meant for **well trained personnel being sufficiently qualified for their respective work**.

These mounting instructions are supplemented by various separate items of documentation (operating instructions, spare parts list, manuals for accessories, etc.). Where necessary, appropriate cross-references are made to these publications in the present documentation.

Explanation of the symbols used in this manual

CAUTION!

The catchword “CAUTION” designates notes in this documentation that, if neglected, may cause **damage and/or malfunction of the unit or other material assets**.

WARNING!

The catchword “WARNING” used in conjunction with the general caution symbol designates safety and danger notes in this documentation that, if neglected, may cause to **injury to persons**.

DANGER!

The catchword “DANGER” used in conjunction with the general caution symbol designates safety and danger notes in this documentation that, if neglected, may lead to **severe injury or even death of persons**.

Safekeeping

Please safeguard these mounting instructions in a safe place, where it can be immediately accessed. If the equipment changes hands, the documentation should be passed on to the new operator.

If the documentation gets mislaid, please contact your Nordmann supplier.

Language versions

The present mounting instructions are available in various languages. Please contact your Nordmann supplier for information.

Copyright protection

The present mounting instructions are protected under the Copyright Act. Passing-on and reproduction of the manual (or part thereof) as well as exploitation and communication of the contents are prohibited without written permission by the manufacturer. Violation of copyright terms is subject to legal prosecution and arises liability for indemnification.

The manufacturer reserves the right to fully exploit commercial patent rights.

2 For your safety

General

Every person working with the Nordmann AT4 must have read and understood the present mounting instructions before carrying out any installation work. Knowing and understanding the contents of the mounting instructions is a basic requirement for protecting the personnel against any kind of danger, to prevent faulty installation, and to install and operate the unit safely and correctly.

All ideograms, signs and markings applied to the unit must be observed and kept in readable state.

Qualification of personnel

All actions described in the present mounting instructions must be carried out only by **well trained and sufficiently qualified personnel authorised by the owner**.
For safety and warranty reasons any action beyond the scope of this manuals must be carried out only by qualified personnel authorised by the manufacturer.

It is assumed that all persons working with the Nordmann AT4 are familiar and comply with the appropriate regulations on work safety and the prevention of accidents.

Intended use

The steam humidifier Nordmann AT4 is intended exclusively for **air humidification via a steam distributor or a fan unit approved by the manufacturer within the specified operating conditions** (see chapter 6 “Product specifications”). Any other type of application without the express written consent of the manufacturer is considered as not conforming with the intended purpose and may lead to the Nordmann AT4 becoming dangerous. Operation of the equipment in the intended manner requires **that all the information in these instructions is observed (in particular the safety instructions)**.

Danger that may arise from the unit:

DANGER!
Danger of electric hazard!

The Nordmann AT4 is mains powered. One may get in touch with live parts when the unit is open. Touching live parts may cause severe injury or danger to life.

Prevention: The Nordmann AT4 must be connected to the mains only after all mounting and installation work has been completed, all installations have been checked for correct workmanship and the covers has been relocated properly.

Behaviour in case of danger

All persons working with the Nordmann AT4 are obliged to report any alterations to the unit that may affect safety to the owner without delay and to **secure such a unit against accidental power-up**.

Prohibited modifications to the unit

No modifications must be undertaken on the Nordmann AT4 without the express written consent of the manufacturer.

For the replacement of defective components use exclusively **original accessories and spare parts** available from your Nordmann supplier.

3 Product Overview

3.1 Models overview

Steam air humidifiers Nordmann AT4 are available with **different heating voltages** and **steam capacities ranging from 5 kg/h up to a maximum of 130 kg/h**.

Heating voltage **	Max. steam capacity in kg/h	Model Nordmann AT4	Unit size			
			Single unit			Double unit
			small	medium	large	large
400V3 (400 V/3~/50...60 Hz)	5	534	x			
	8	834	x			
	15	1534		x		
	23	2364		x		
	32	3264			x	
	45	4564			x	
	64	6464				x
	65	6564			x	
	90	9064				x
	130	13064				x
400V2 (400 V/2~/50...60 Hz)	5	524	x			
	8	824	x			
230V3 (230 V/3~/50...60 Hz)	5	532	x			
	8	832	x			
	15	1532		x		
	23	2362		x		
	32	3262			x	
	46	4662				x
	64	6462				x
230V1 (230 V/1~/50...60 Hz)	5	522	x			
	8	822	x			

** Other heating voltages on request

Key model designation

Example:
Nordmann AT4 4564 400V3

Product designation:

Unit model:

Heating voltage:
400V/3~/50...60Hz: **400V3**
400V/2~/50...60Hz: **400V2**
230V/3~/50...60Hz: **230V3**
230V/1~/50...60Hz: **230V1**

3.2 Identification of the unit

The identification of the unit is found on the type plate:

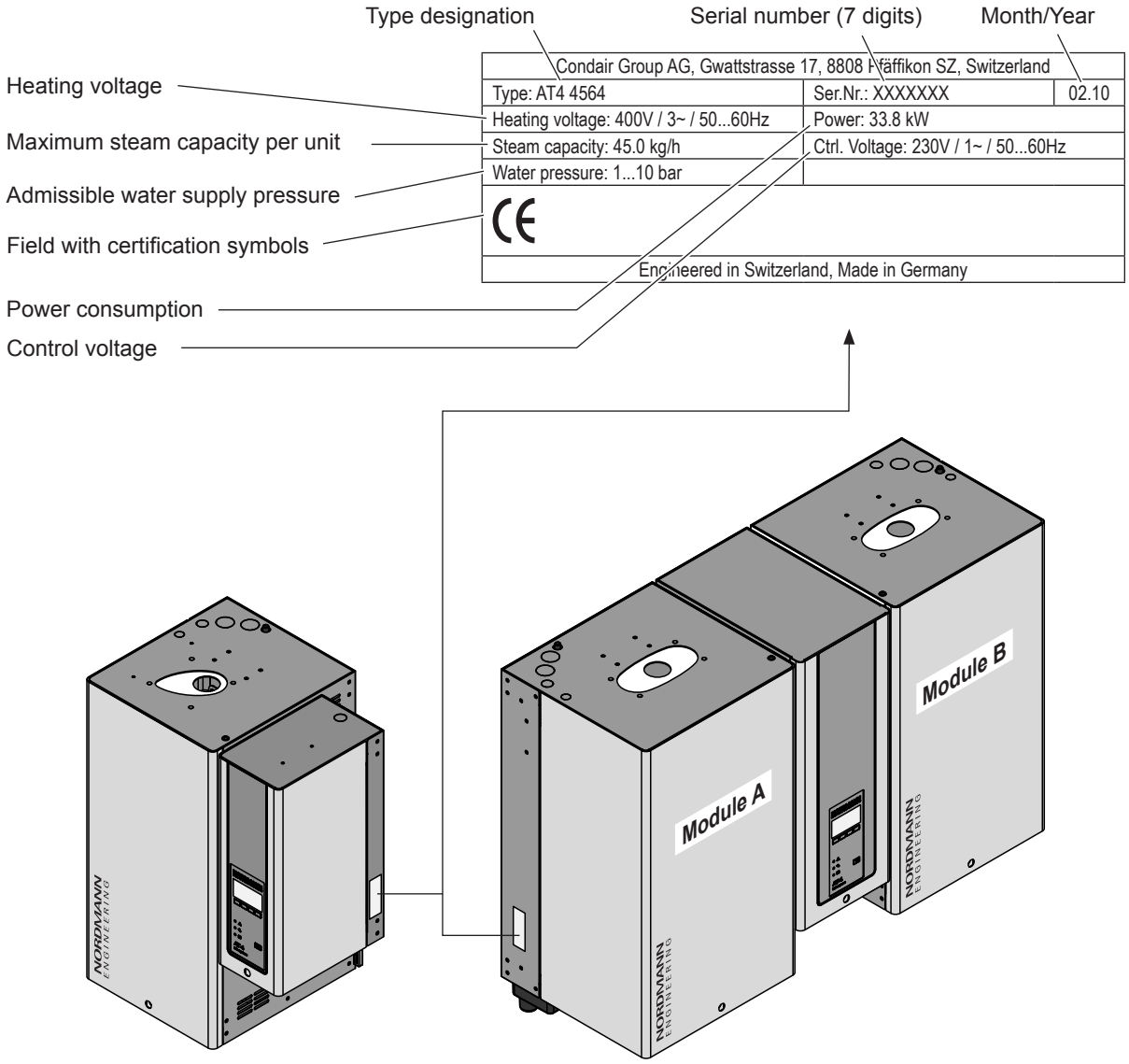

3.3 Steam humidifier construction

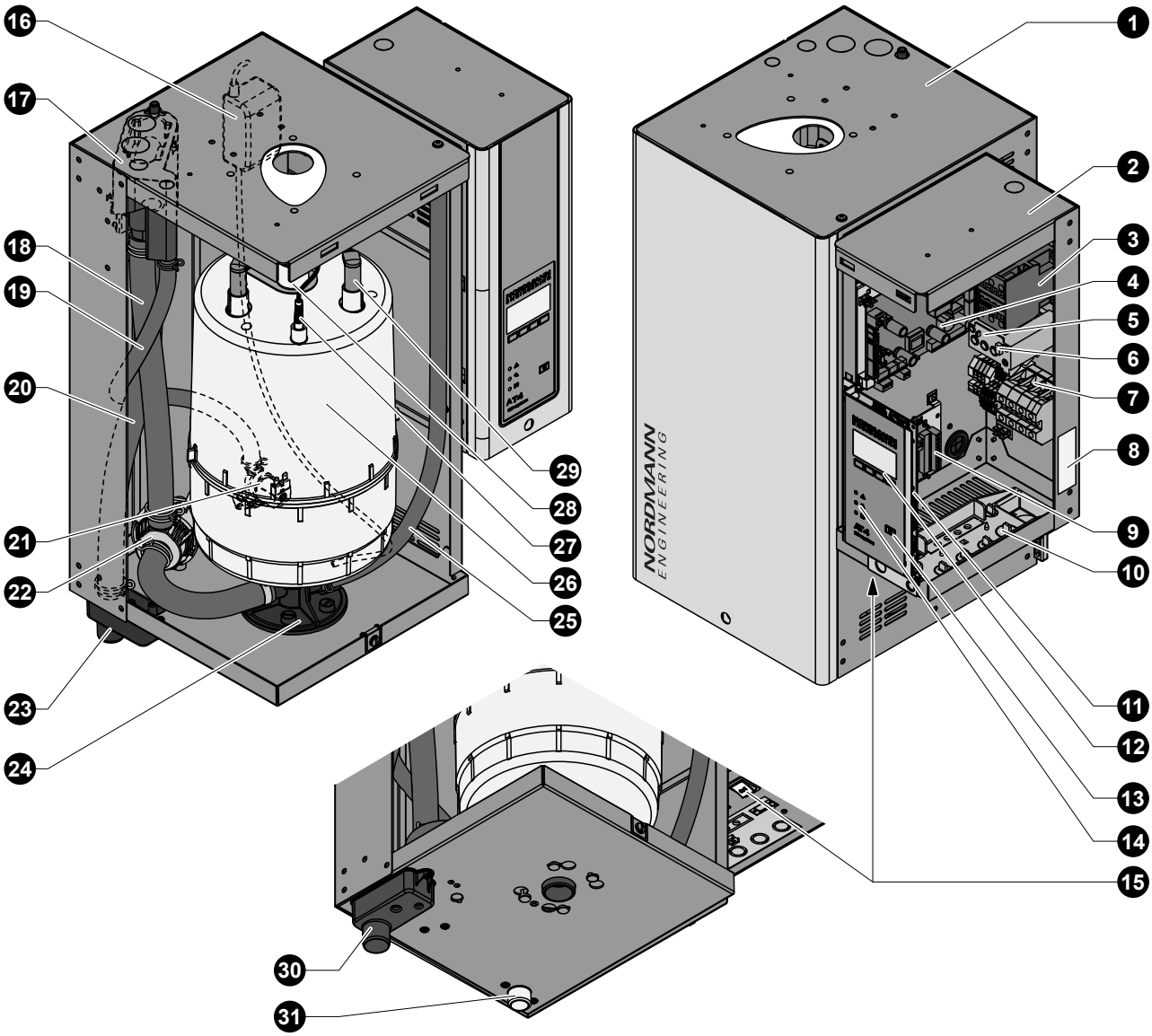

figure shows medium unit

1 Steam cylinder compartment
2 Control compartment
3 Main contactor
4 Power board
5 Thermal relay
Note: on some unit models the thermal relay is not connected directly to the main contactor!
6 Reset key thermal relay
7 Connecting terminals
8 Type plate
9 Remote operating and fault indication board (option)
10 Cable openings
11 Control board with CF Card
12 Display and control unit
13 Drain key
14 Operation status indicators
15 Unit switch
16 SC pump
17 Water cup
18 Filling and draining hose
19 Water supply hose
20 Overflow hose
21 Inlet valve
22 Drain pump
23 Drain cup
24 Steam cylinder receptacle
25 Drain hose (manual drain)
26 Steam cylinder
27 Level sensor
28 Steam outlet
29 Electrode plug
30 Drain connector
31 Water supply connector

3.4 Functional description

The steam humidifier Nordmann AT4 is a pressureless steam generator that utilizes an electrode heating. The steam humidifier Nordmann AT4 is designed for air humidification via a steam distributor (steam distribution pipe, fan unit or steam distribution system MultiPipe).

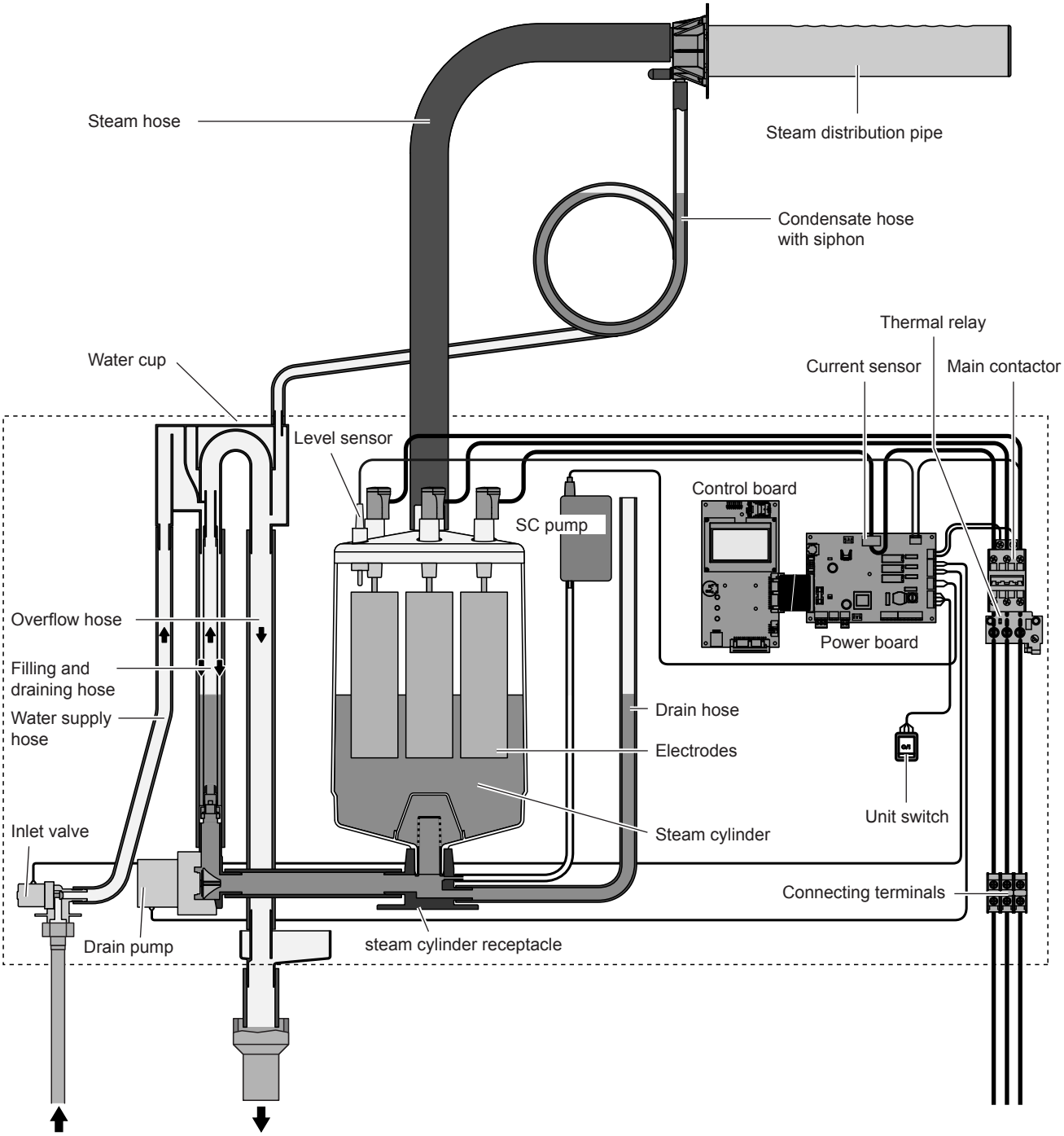

Steam generation

Any time steam is requested, the electrodes are supplied with voltage via main contactor. Simultaneously, the inlet valve opens and water enters the steam cylinder from the bottom via water cup and supply line. As soon as the electrodes come in contact with the water, current begins to flow between the electrodes, eventually heating and evaporating the water. The more the electrode surface is exposed to water, the higher is the current consumption and thus the steam capacity.

Upon reaching the requested steam capacity, the inlet valve closes. If the steam generation decreases below a certain percentage of the required capacity, due to lowering of the water level (e.g. because of the evaporation process or drainage), the inlet valve opens until the required capacity is available again.
If the required steam capacity is lower than the actual output, the inlet valve is closed until the desired capacity is achieved by lowering of the water level (evaporation process).

Level monitoring
A sensor provided in the steam cylinder cover detects when the water level gets too high. The moment the sensor comes in contact with water, the inlet valve closes.

Drainage
As a result of the evaporation process, the conductivity of the water increases due to an escalating mineral concentration. Eventually, an inadmissibly high current consumption would take place if this concentration process were permitted to continue. To prevent this concentration from reaching a value, unsuitably high for the operation, a certain amount of water is periodically drained from the cylinder and replaced by fresh water.

Lime management

The interval controlled SC pump blows air into the steam cylinder. Thus keeping the solved minerals in the water in motion so they are discharged with the automatic drain cycles.

Maximum current monitoring

The thermal relay monitors the current flow to the electrodes. If the current exceeds a preset value the thermal relay triggers and interrupts the control voltage supply whereby the Nordmann AT4 is switched off.
When the thermal relay has tiggered it can be reset after a certain period of time via the reset key.

Control

The steam production can be controlled with the internal or an external continuous controller or an external humidistat (24 VDC On/Off control).

3.5 Humidification system overview

System overview duct humidification (single units)

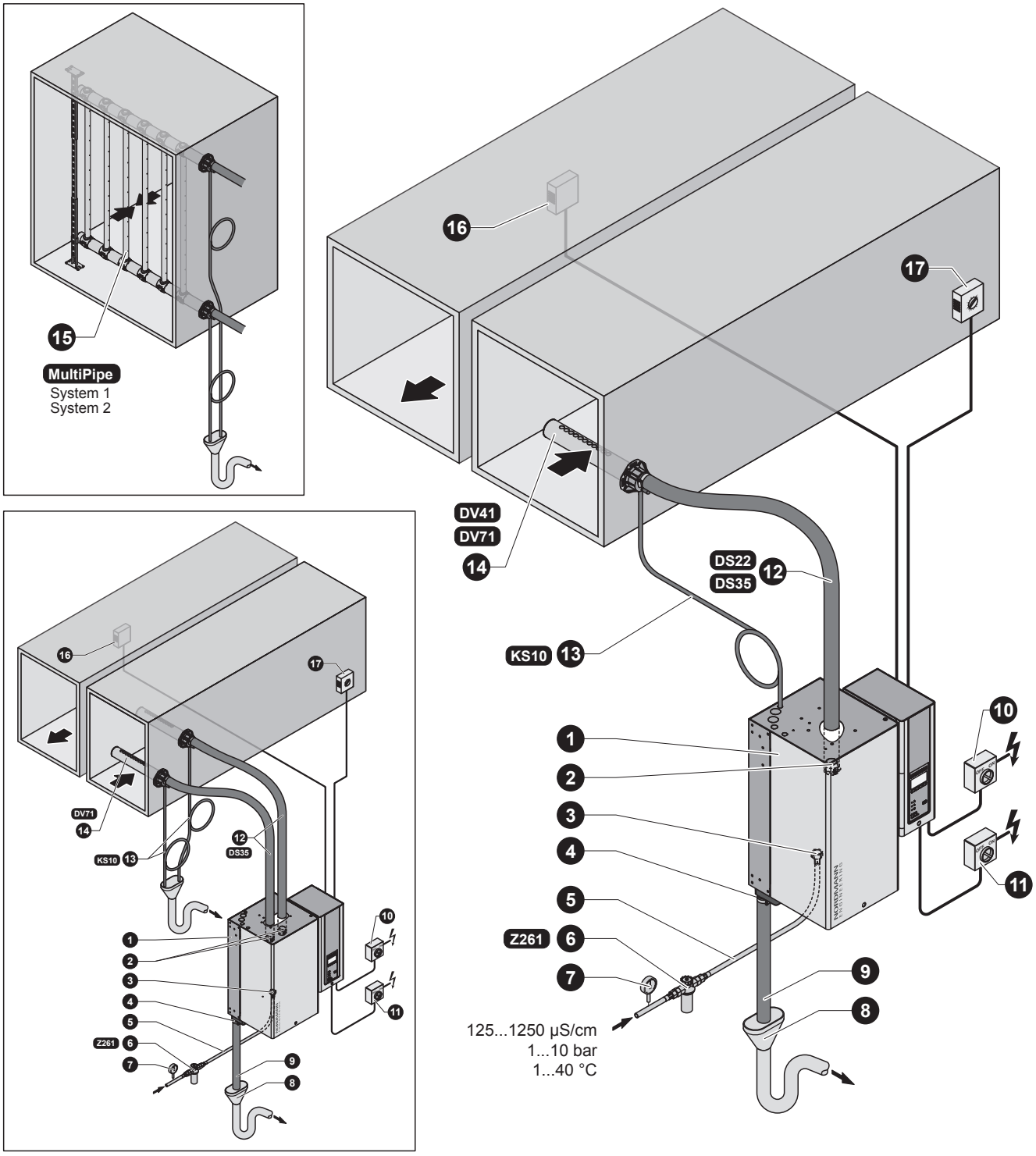

1 Steam humidifier
2 Steam connector
3 Water supply connector
4 Water drain connector
5 Water connection hose G 3/4"- G 3/8" (included in the delivery)
6 Filter valve (accessory “Z261”)
7 Manometer (installation recommended)
8 Funnel with siphon (building side)
9 Water drain hose (included in the delivery)
10 Service switch control voltage supply (building side)
11 Service switch heating voltage supply (building side)
12 Steam hose (accessory “DS22”/“DS35”)
13 Condensate hose (accessory “KS10”)
14 Steam distribution pipe (accessory “DV41-..”/“DV71-..”)
15 Steam distribution system (accessory “MultiPipe”)
16 Continuous humidity controller or humidistat
17 Safety humidistat

System overview duct humidification (double units)

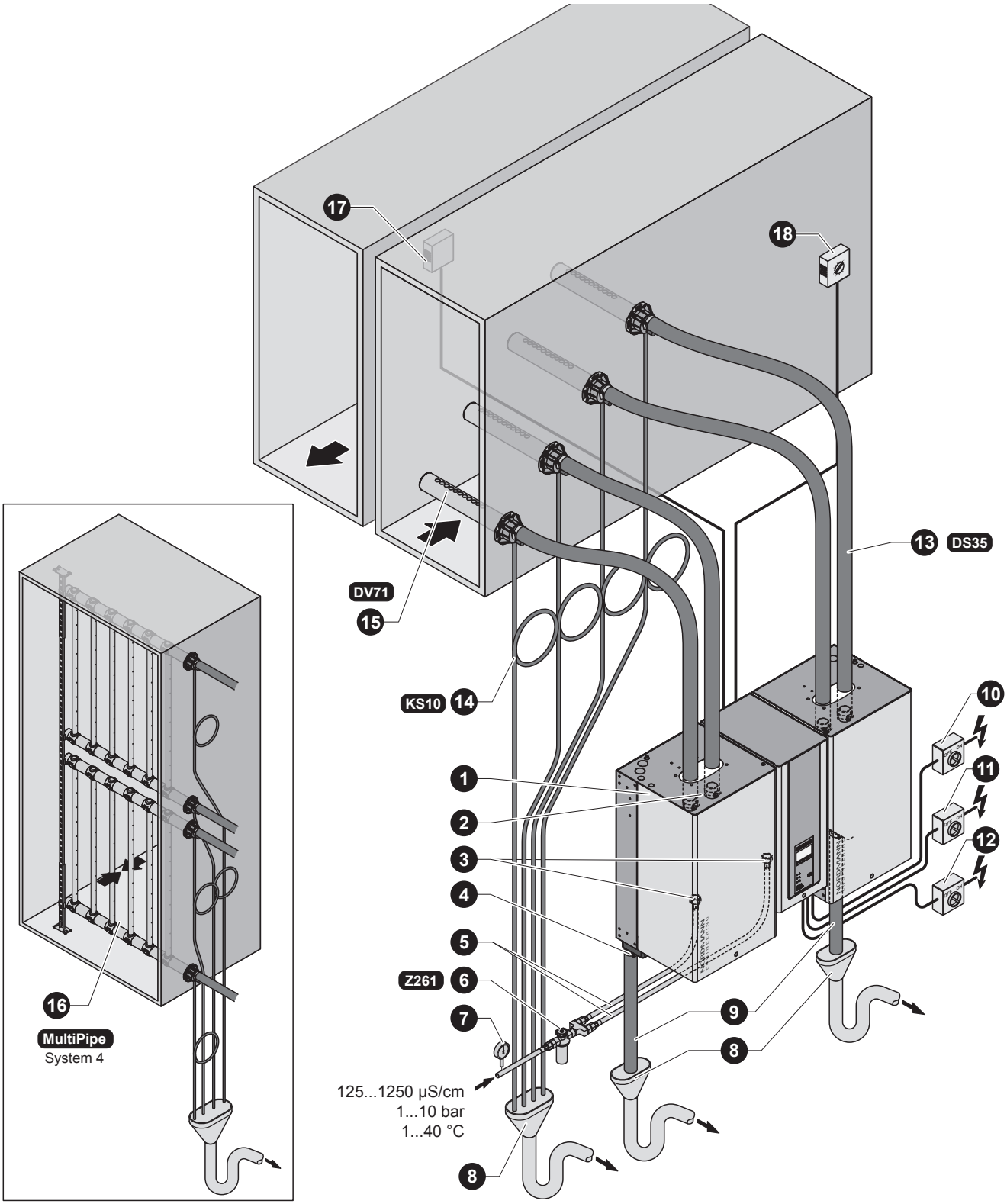

1 Steam humidifier
2 Steam connector
3 Water supply connectors
4 Water drain connector
5 Water connection hose G 3/4"- G 3/8" (included in the delivery)
6 Filter valve (accessory “Z261”)
7 Manometer (installation recommended)
8 Funnel with siphon (building side)
9 Water drain hose (included in the delivery)
10 Service switch control voltage supply (building side)
11 Service switch heating voltage supply module A (building side)
12 Service switch heating voltage supply module B (building side)
13 Steam hose (accessory “DS35”)
14 Condensate hose (accessory “KS10”)
15 Steam distribution pipe (accessory “DV71-..”)
16 Steam distribution system (accessory “MultiPipe”)
17 Continuous humidity controller or humidistat
18 Safety humidistat

System overview room humidification (single units)

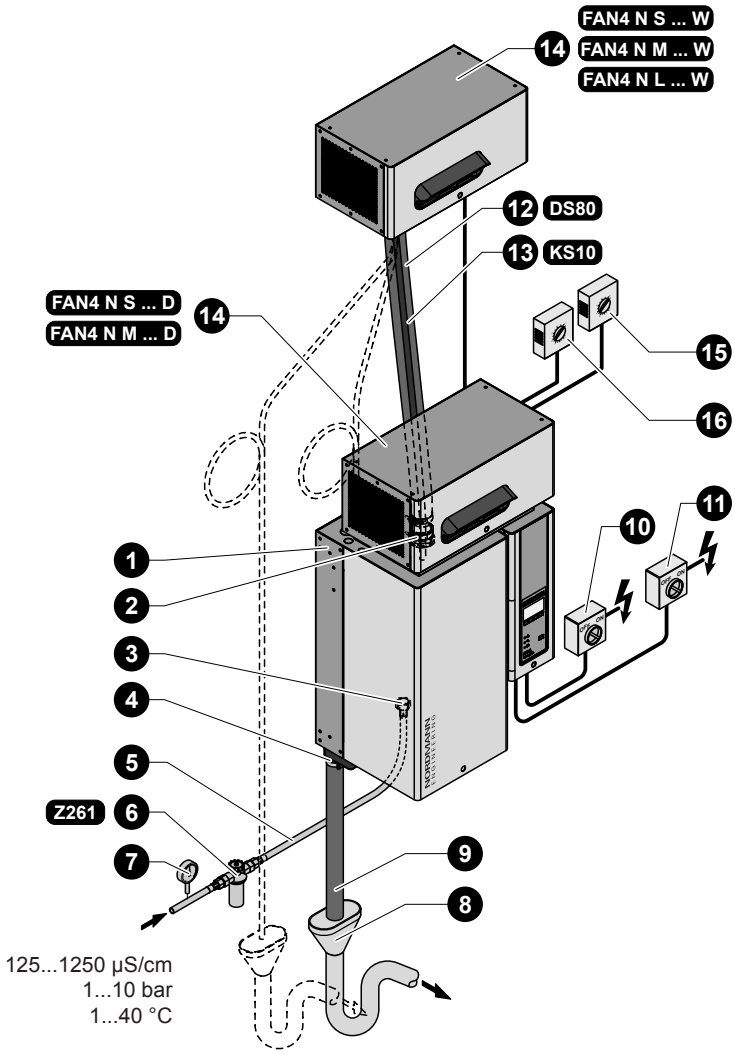

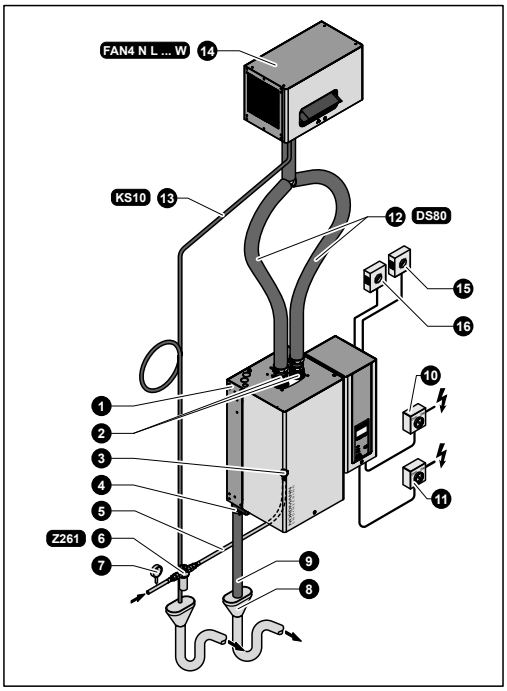

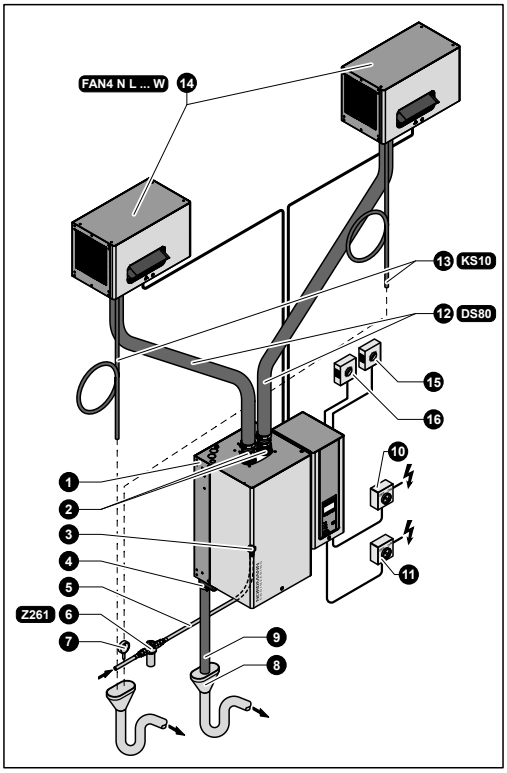

1 Steam humidifier
2 Steam connector
3 Water supply connector
4 Water drain connector
5 Water connection hose G 3/4"- G 3/8" (included in the delivery)
6 Filter valve (accessory “Z261”)
7 Manometer (installation recommended)
8 Funnel with siphon (building side)
9 Water drain hose (included in the delivery)
10 Service switch control voltage supply (building side)
11 Service switch heating voltage supply (building side)
12 Steam hose (accessory “DS80”)
13 Condensate hose (accessory “KS10”)
14 Ventilation unit (accessory “FAN4 N...”)
15 Continuous humidity controller or humidistat
16 Safety humidistat

System overview room humidification (double units)

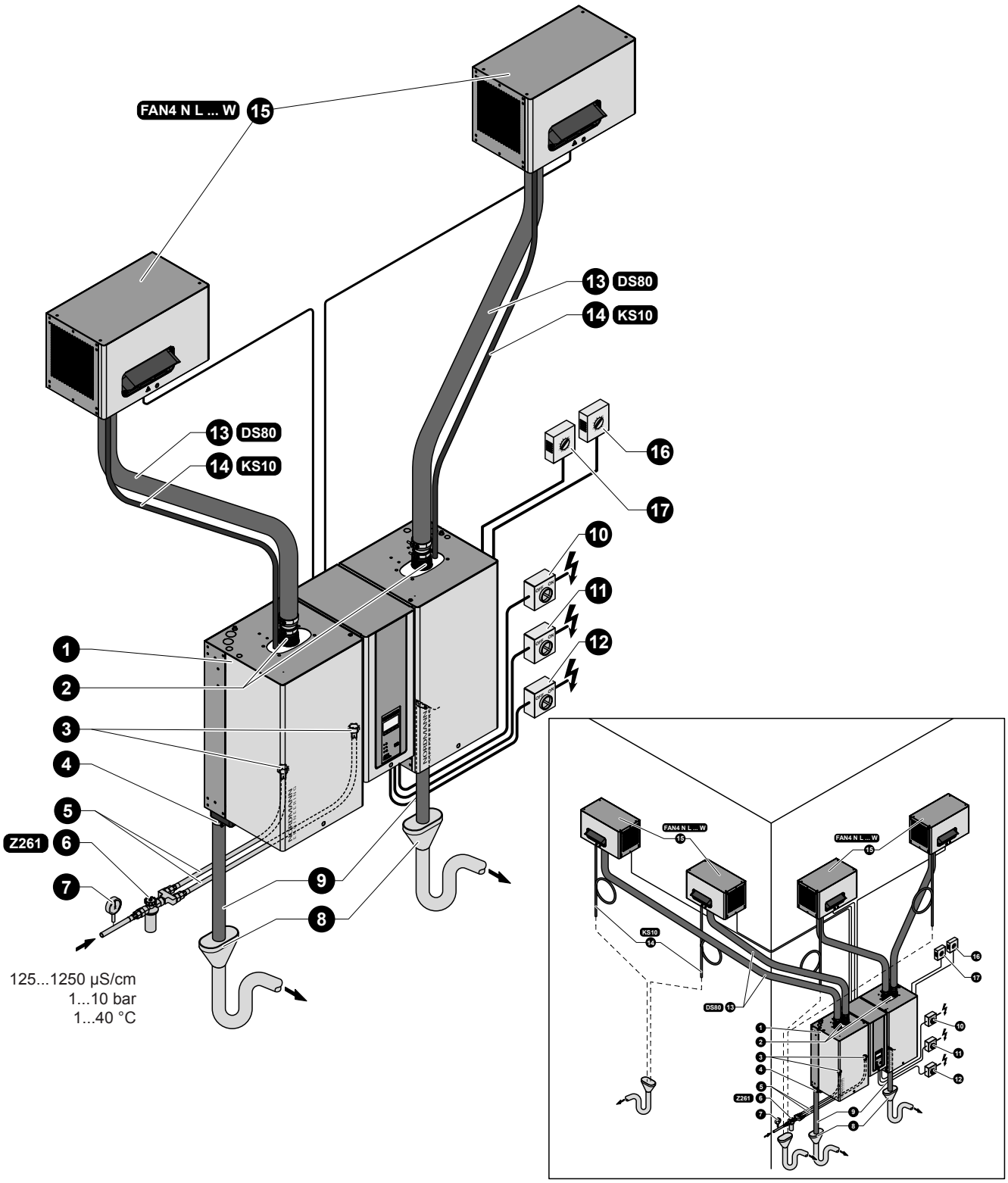

1 Steam humidifier
2 Steam connector
3 Water supply connectors
4 Water drain connector
5 Water connection hose G 3/4"- G 3/8" (included in the delivery)
6 Filter valve (accessory “Z261”)
7 Manometer (installation recommended)
8 Funnel with siphon (building side)
9 Water drain hose (included in the delivery)
10 Service switch heating voltage supply (building side)
11 Service switch heating voltage supply module A (building side)
12 Service switch heating voltage supply module B (building side)
13 Steam hose (accessory “DS80”)
14 Condensate hose (accessory “KS10”)
15 Ventilation unit (accessory “FAN4 N...”)
16 Continuous humidity controller or humidistat
17 Safety humidistat

3.6 Options

	Nordmann AT4...										
	522 524 532 534	822 824 832 834	1532 1534	2362 2364	3262 3264	4564	4662	6462 6464	6564	9064	13064
Remote operating and fault indication PCB with relay contacts for the connection of remote displays for “Operation”, “Steam”, “Fault” and “Service”.	**1xRFI**										
Overpressure set Kit for mounting the water cup to the unit cover when operating the steam humidifiers in systems with a duct air pressure of up to 10 kPa.	**1xOPS**						**2xOPS**		**1xOPS**	**2xOPS**	
Steam hose connector with condensate trap	**1xCT..**					**2xCT..**				**4xCT..**	
Cable glands	**1xCG**						**2xCG**		**1xCG**	**2xCG**	
Internal control voltage supply (for mains supply **with neutral lead**)	**1xS-CVI**			**1xM-CVI**					**1xL-CVI**		
Transformer 400V/230V for internal control voltage supply (for mains supply **without neutral lead**)	**Trafo**										
@-Link AT4 Gateway to connect the Nordmann AT4 to a building management system. Two versions are available: BACnet/IP or LonWorks.	Configuration according to separate documentation										

	Nordmann AT4... (400 V/3~/50...60 Hz)										
	534	834	1534	2364	3264	4564	---	6464	6564	9064	13064
Steam cylinder for low water conductivity from 80 to 125 µS/cm	1x 534A-L	1x 834A-L	1x 1534A-L	1x 2364A-L	1x 3264A-L	1x 4564A-L	---	2x 3264A-L	---	2x 4564A-L	---

3.7 Accessories

3.7.1 Accessories overview

Accessories for water installation

	Nordmann AT4...										
	522 524 532 534	822 824 832 834	1532 1534	2362 2364	3262 3264	4564	4662	6462 6464	6564	9064	13064
Filter valve	**Z261** (1 pc. per system)										

Accessories for steam installation

	Nordmann AT4...										
	522 524 532 534	822 824 832 834	1532 1534	2362 2364	3262 3264	4564	4662	6462 6464	6564	9064	13064
Steam distribution pipe (Details see chapter 3.7.2)	**1xDV41**		**1xDV71**			**2xDV71**				**4xDV71**	
Steam distribution system MultiPipe (Details see chapter 3.7.2)	**—**	**—**	**System 1**			**System 2**				**System 4**	
Fan unit (Details see chapter 3.7.2)	**1x FAN4 N S D or FAN4 N S W**		**1x FAN4 N M D or FAN4 N M W**		**1x FAN4 N L W**	**1x or 2x FAN4 N L W**	**2x FAN4 N L W**			**4x FAN4 N L W**	
Steam hose / meter	**DS22 or DS80 (FAN4 N...)**		**DS35 oder DS80 (FAN4 N...)**								
EcoTherm Insulation hose / meter	**ECT22 (DS22) or ECT80 (DS80)**		**ECT60 (DS35) or ECT80 (DS80)**								
Condensate hose / meter	**KS10**										

Accessories for humidity control

	Nordmann AT4...										
	522 524 532 534	822 824 832 834	1532 1534	2362 2364	3262 3264	4564	4662	6462 6464	6564	9064	13064
Duct humidistat	**NHD** (1 pc. per system)										
Room humidistat	**NHR** (1 pc. per system)										
Humidity sensor for duct installation	**NDC** (1 pc. per system)										
Humidity sensor for room installation	**NRC** (1 pc. per system)										

General accessories

	Nordmann AT4...										
	522 524 532 534	822 824 832 834	1532 1534	2362 2364	3262 3264	4564	4662	6462 6464	6564	9064	13064
All-weather protective housing	Layout according to the separate data sheet										
Remote Terminal	1 Terminal for the remote control of up to 8 humidifiers										

3.7.2 Accessory details

3.7.2.1 Steam distribution pipe DV41-.../DV71-...

The steam distribution pipes are selected on the basis of the **duct width** (for horizontal installation) or the **duct height** (for vertical installation) and the **capacity of the steam humidifier**.
Important! Always select the longest possible steam distribution pipe (optimum humidification distance).

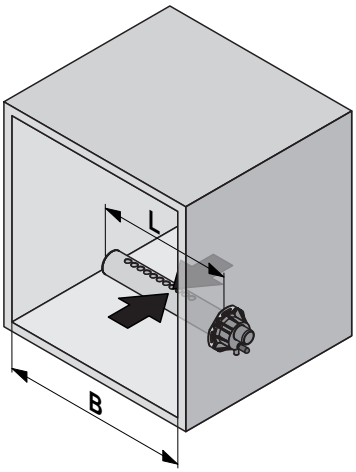

Steam distribution pipes for Nordmann AT4 [1]		Length (L) steam distribution pipe	Duct width (B)
Type DV41-..	Type DV71-..	in mm [2]	in mm
41-200		200	210...400
41-350	71-350	350	400...600
41-500	71-500	500	550...750
41-650	71-650	650	700...900
41-800	71-800	800	900...1100
41-1000	71-1000	1000	1100...1300
41-1200	71-1200	1200	1300...1600
	71-1500	1500	1600...2000
	71-1800	1800	2000...2400
	71-2000	2000	2200...2600
	71-2300	2300	2500...2900
	71-2500	2500	2700...3100

[1] Material: CrNi steel [2] special length on request

Note: If the humidification distance (see chapter 5.4.2) has to be reduced for technical reasons, the amount of steam per unit must be divided between **several steam distribution pipes** or the **steam distribution system MultiPipe** must be used. If this is the case, contact your Nordmann supplier.

3.7.2.2 MultiPipe steam distribution system

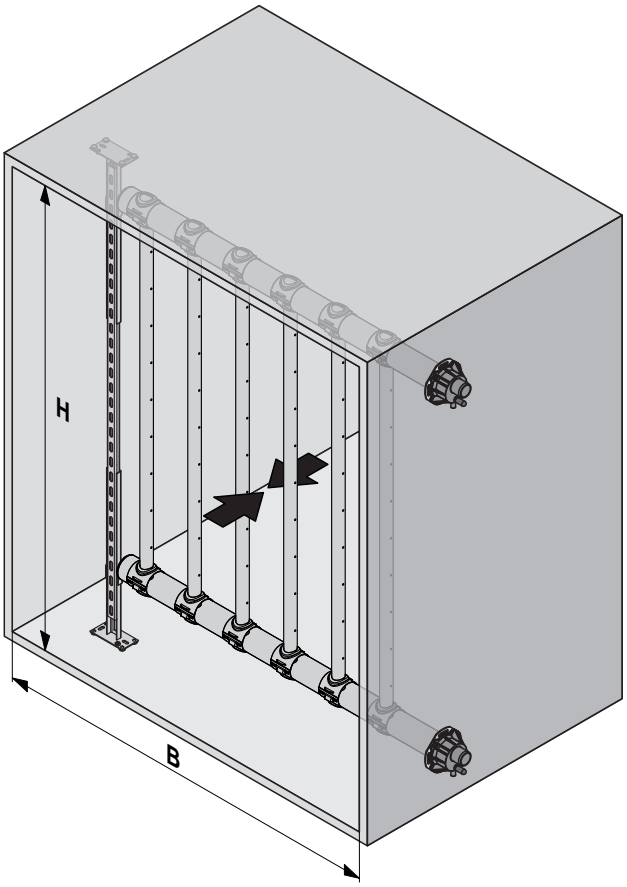

The **MultiPipe** steam distribution system is used in ventilation ducts with a short humidification distance (for the calculation of the humidification distance refer to chapter 5.4.2). When ordering an **MultiPipe** system the duct dimension must be specified. Please consult the data in the following table.

MultiPipe	Number of steam connectors	Max. steam capacity in kg/h [1)]	Duct dimensions	
			Width B in mm	Height H in mm
System 1	1	32 (23)	450-1500	450-1650
System 2	2	65 (45)	450-2200	450-2200
System 4	4	130 (90)	450-2500	800-3200

[1)] For duct widths <600 mm the value in brackets apply

3.7.2.3 Fan units FAN4 N...

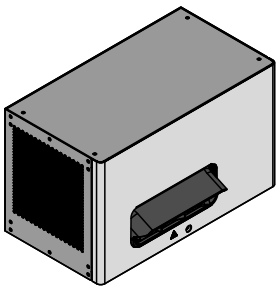

The fan units FAN4 N... – in combination with the steam humidifiers Nordmann AT4 – are used for direct room humidification. The fan units **FAN4 N S D** and **FAN4 N M D** are **mounted directly on the humidifier.** The fan units **FAN4 N S W**, **FAN4 N M W** und **FAN4 N L W** are mounted separately **above the humidifier to the wall**.
The type and number of fan units are dependent on the steam capacity and on the type of the humidifier and can be gathered from the table in chapter 3.7.1.

Note: Further information on the fan units FAN4... can be found in the separate manual supplied with the fan unit.

Important note regarding the IP protection class: If a Nordmann AT4 with fan unit FAN4 N... shall be operated without the fan unit at a later date (e.g. retrofitting for duct humidification) the open bores in the housing ceiling must be sealed with plugs, otherwise the protection class IP21 is not assured anymore.

3.8 Standard delivery

The standard delivery includes:

– Steam humidifier Nordmann AT4 with water connection hose G 3/4" - G 3/8" and water drain hose ø 31/40 mm equipped with the options ordered according to chapter 3.6, fixing set, mounting instructions (this document) and operating instructions, packaged in cardboard box

Unit type	Dimensions packaging (L x W x D)	Transport weight
522, 524, 532, 534, 822, 824, 832, 834	720 mm x 520 mm x 340 mm	14.0 kg
1532, 1534, 2362, 2364	760 mm x 600 mm x 420 mm	19.5 kg
3262, 3264, 4564, 6564	780 mm x 650 mm x 420 mm	31.0 kg
4662, 6462, 6464, 9064, 13064	1045 mm x 430 mm x 820 mm	59.0 kg

– Ordered accessories with operating instructions according chapter 3.7, packed separately

– Spare parts list

3.9 Storing/Transportation/Packaging

Storing

Store the unit in a protected area meeting the following requirements:

– Room temperature: 1 ... 40 °C
– Room humidity: 10 ... 75 %rh

Transportation

For optimum protection always transport the unit in the original packaging.

The weight of the units with a steam capacity of more than 8 kg/h is more than 20 kg (see chapter 6.1 “Technical data”). Therefore, always transport these units with the help of another person or use an appropriate lifting device. Always place the unit on its back side.

Packaging

Keep the original packaging of the Nordmann AT4 for later use.

In case you wish to dispose of the packaging, observe the local regulations on waste disposal. Never dispose of the packaging to the environment.

4 Notes for the planning engineer

4.1 Selecting the unit version

To select the unit version the following planning steps are required:

1. Calculating the required maximum steam capacity according chapter 4.1.1
2. Selecting the unit version from the table in chapter 4.1.2

4.1.1 Calculating the maximum required steam capacity

The maximum required steam capacity must be calculated based on one of the following formulas:

$$m_D = \frac{V \cdot \rho}{1000} \cdot (x_2 - x_1)$$

or

$$m_D = \frac{V}{1000 \cdot \varepsilon} \cdot (x_2 - x_1)$$

$\mathbf{m_D}$: maximum steam demand in **kg/h**
V: volume of supply air portion per hour in **m³/h** (for indirect room humidification) or room volume to be humidified per hour in **m³/h** (for direct room humidification)
ρ: specific gravity of air in **kg/m³**
ε: specific volume of air in **m³/kg**
$\mathbf{x_2}$: desired absolute room air humidity in **g/kg**
$\mathbf{x_1}$: minimum absolute supply air humidity in **g/kg**

The values for **ρ**, **ε**, $\mathbf{x_2}$ and $\mathbf{x_1}$ can be gathered from the **h,x-diagram** or the **Carrier-Diagram** for moist air respectively.

Important notes:

– The required maximum steam capacity depends on the specific application and the installation. The calculated steam capacity based on the above formulas, the h,x diagram and the condition of the air to be humidified does not consider any steam loss (e.g. due to condensation in the steam hoses and the steam distributors), any heat loss of the unit as well as any absorption or release of humidity of materials located in the room being humidified.
  In addition, the calculated steam capacity does not consider any losses caused by the draining rate depending on the water quality as well as any losses occur if the steam humidifier is operated on a mains circuit with a ground fault circuit interrupter.

  The total amount of losses depends on the entire system and must be taken into consideration when calculating the required steam capacity. If you have any questions regarding the calculation of the steam capacity please contact your Nordmann supplier.

– For systems where the max. required steam capacity varies extensively (e.g. for test facilities or for systems with variable air volume flow, etc.), please contact your Nordmann supplier.

4.1.2 Selecting the unit

Nordmann AT4 4564 400V3

Heating voltage **	Max. steam capacity in kg/h	Model Nordmann AT4	Unit size			
			Single unit			Double unit
			small	medium	large	large
400V3 (400 V/3~/50...60 Hz)	5	534	x			
	8	834	x			
	15	1534		x		
	23	2364		x		
	32	3264			x	
	45	4564			x	
	64	6464				x
	65	6564			x	
	90	9064				x
	130	13064				x
400V2 (400 V/2~/50...60 Hz)	5	524	x			
	8	824	x			
230V3 (230 V/3~/50...60 Hz)	5	532	x			
	8	832	x			
	15	1532		x		
	23	2362		x		
	32	3262			x	
	46	4662				x
	64	6462				x
230V1 (230 V/1~/50...60 Hz)	5	522	x			
	8	822	x			

** Other heating voltages on request

4.2 Selecting the options an accessories

For selecting the options and accessories see chapter 3.6 and 3.7.

4.3 Selecting the control system

The various control systems

– **System 1: Room humidity control**

System 1 is suited for **direct room humidification** and **air conditioning systems with mainly recirculated air**. The humidity sensor or humidistat respectively is preferably located in the room itself or in the exhaust air duct.

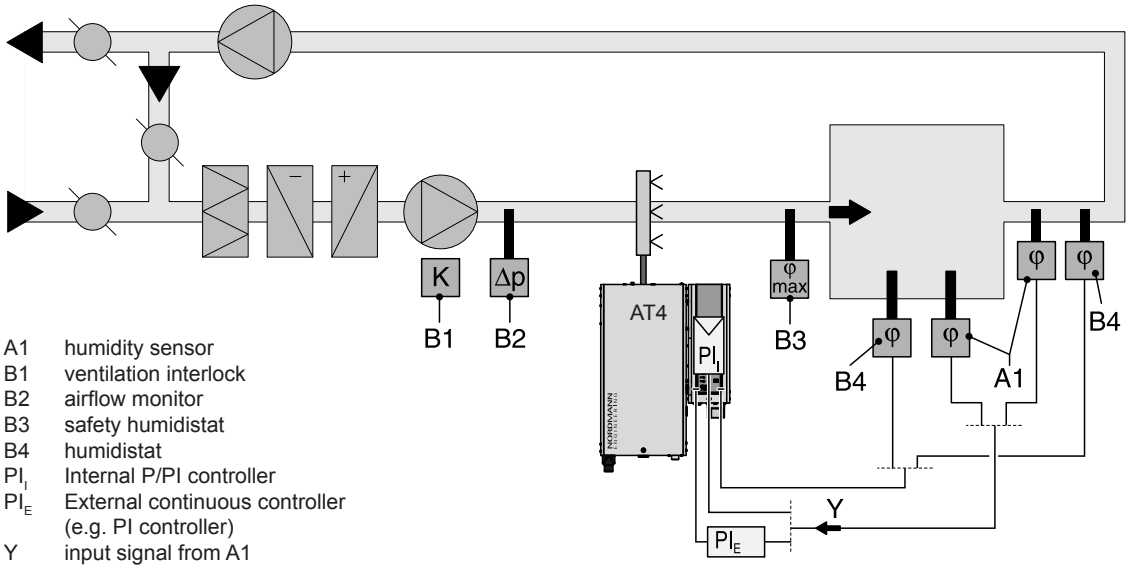

– **System 2: Room humidity control with continuous limitation of the supply air humidity**

System 2 is suited for air conditioning systems with a **large portion of supply air**, **low supply air temperature**, **post-humidification**, or **variable airflow volume**. If the supply air humidity exceeds the preset value, the continuous limitation is effected prior to the room humidity control. The humidity sensor (A1) is preferably located in the exhaust air duct or in the room itself. The humidity sensor (A2) for the limitation of the supply air humidity is located in the supply air duct after the steam distribution pipe. This control system requires a continuous controller with the option to connect a second humidity sensor.
Attention! The continuous limitation of the supply air humidity is no substitute for the safety humidistat.

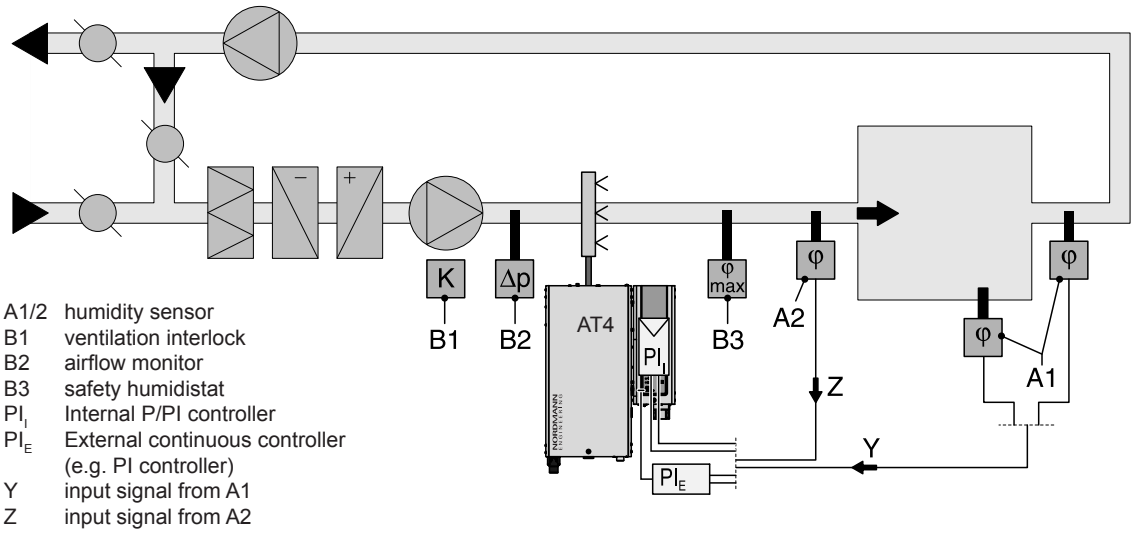

– **System 3: Supply air humidity control with continuous output limitation**

Supply air humidity control (humidity sensor installed in supply air duct) should be used only where room humidity control is impracticable for technical reasons. Such systems always require a PI-controller.
The humidity sensor (A1) is located in the supply air duct after the steam distribution pipe. The humidity sensor (A2) for the continuous output limitation is located in the supply air duct before the steam distribution pipe. Such a system requires a PI-controller with the option to connect a second humidity sensor.

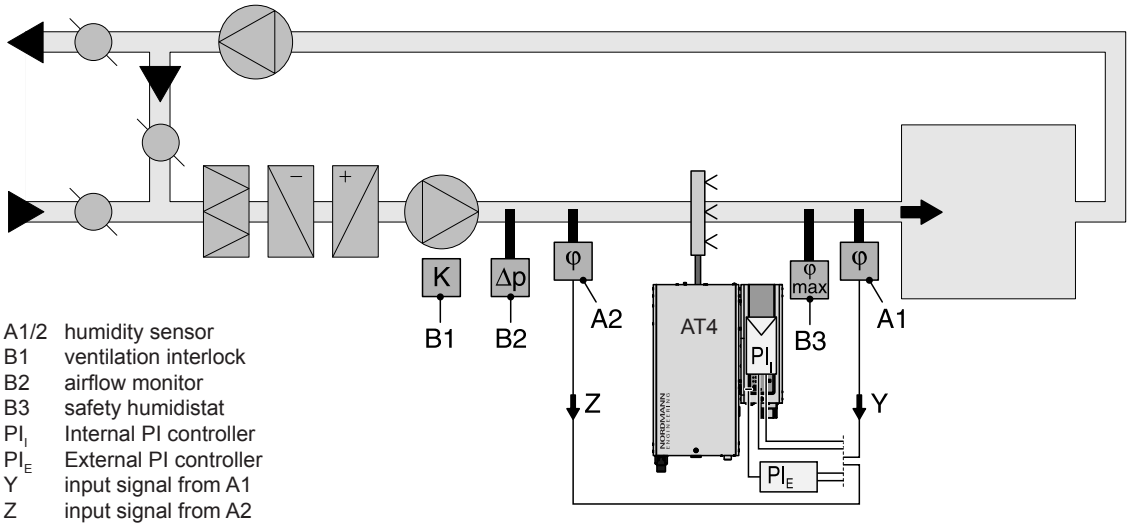

Which humidity control system for which application?

Application	Location of the humidity sensor	
	room or exhaust air duct	supply air duct
Air conditioning systems with:		
– supply air portion up to 33%	System 1	System 1
– supply air portion up to 66%	System 1 or 2	System 2 or 3
– supply air portion up to 100%	System 2	System 3
– supply air humidity control	—	System 3
Direct room humidification	System 1	—

Please contact your Nordmann supplier, if your application meets the following conditions:
– Humidification of small rooms up to 200 m^3
– Air conditioning systems with a high number of air exchanges
– Systems with variable air volume flow
– Test facilities with extreme control accuracy requirements
– Rooms with a high variation in max. steam capacity
– Systems with temperature fluctuations
– Cold rooms and systems with dehumidification

Admissible input signals

see chapter 6.1 “Technical data”

5 Mounting and installation work

5.1 Important notes for mounting and installation work

Qualification of personnel

All mounting and installation work must be carried out only by **well qualified personnel authorised by the owner**. It is the owner's responsibility to verify proper qualification of the personnel.

General note

Strictly observe and comply with all information given in the present mounting instructions regarding the location of the unit and the installation of water, steam and electricity.

Observe and comply with all local regulations dealing with water, steam and electrical installations.

Safety

Some installation work requires removal of the unit covers. Please note the following:

DANGER!
Danger of electric hazard!

You may get in touch with live parts when the unit is open. The steam humidifier must be connected to the mains only after all mounting and installation work has been completed and the cover has been relocated properly.

CAUTION!

The electronic components inside the humidifier are very sensitive to electrostatic discharge. When the unit is open for installation work, appropriate measures must be taken to protect these components against damage caused by electrostatic discharge (ESD protection).

5.2 Installation overviews

Installation overview duct humidification

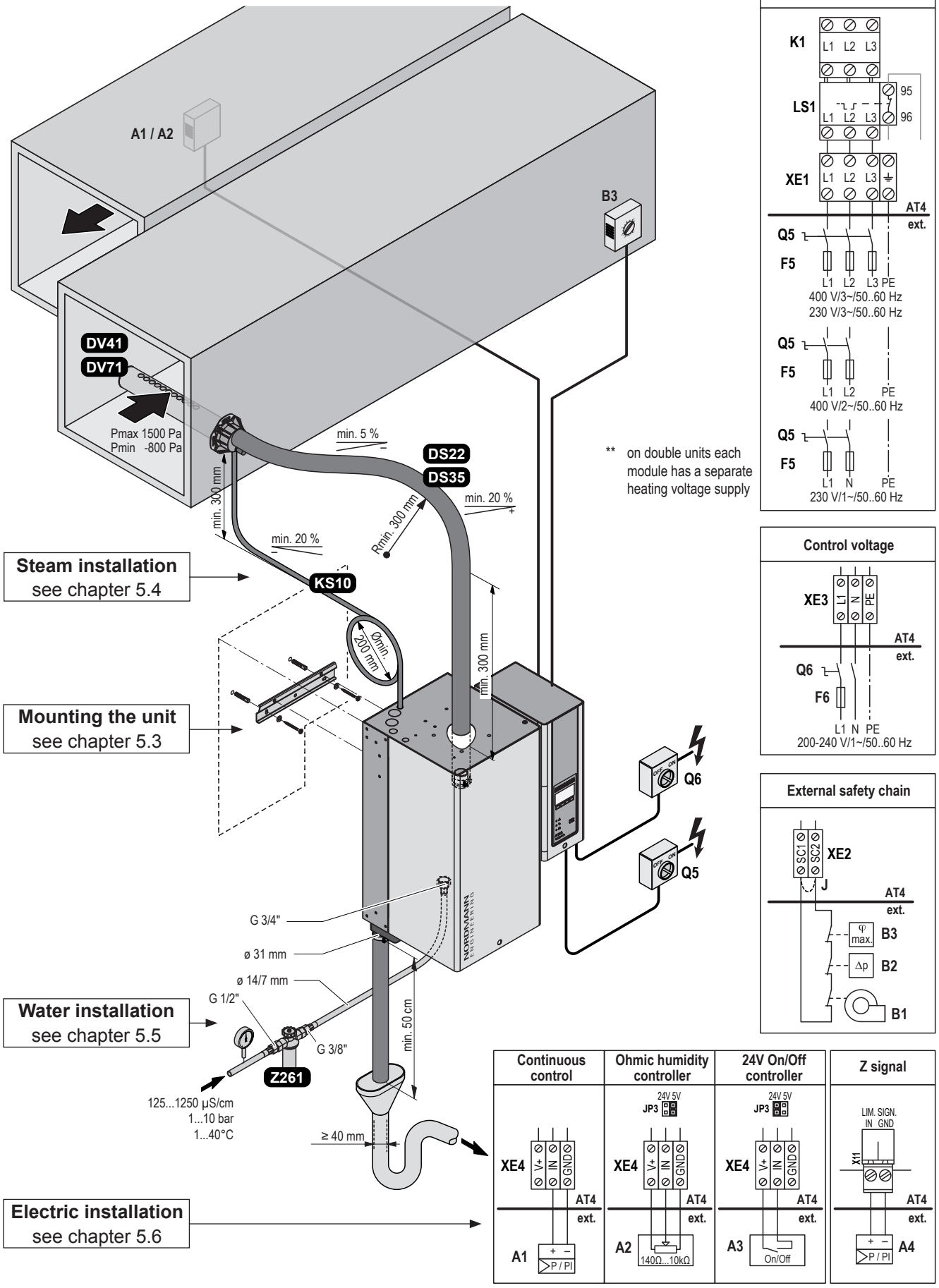

System overview room humidification

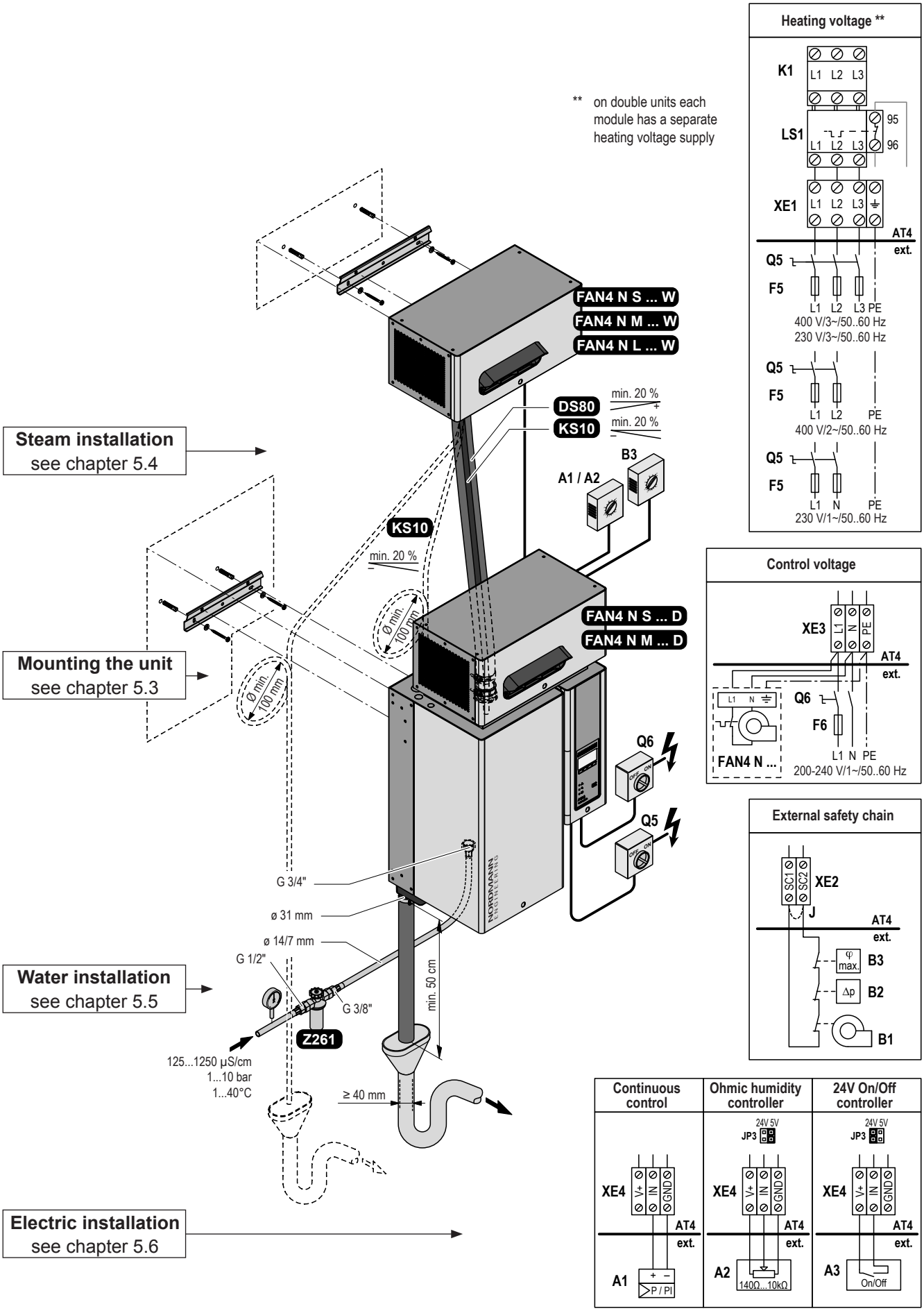

5.3 Mounting the unit

5.3.1 Notes on locating the unit

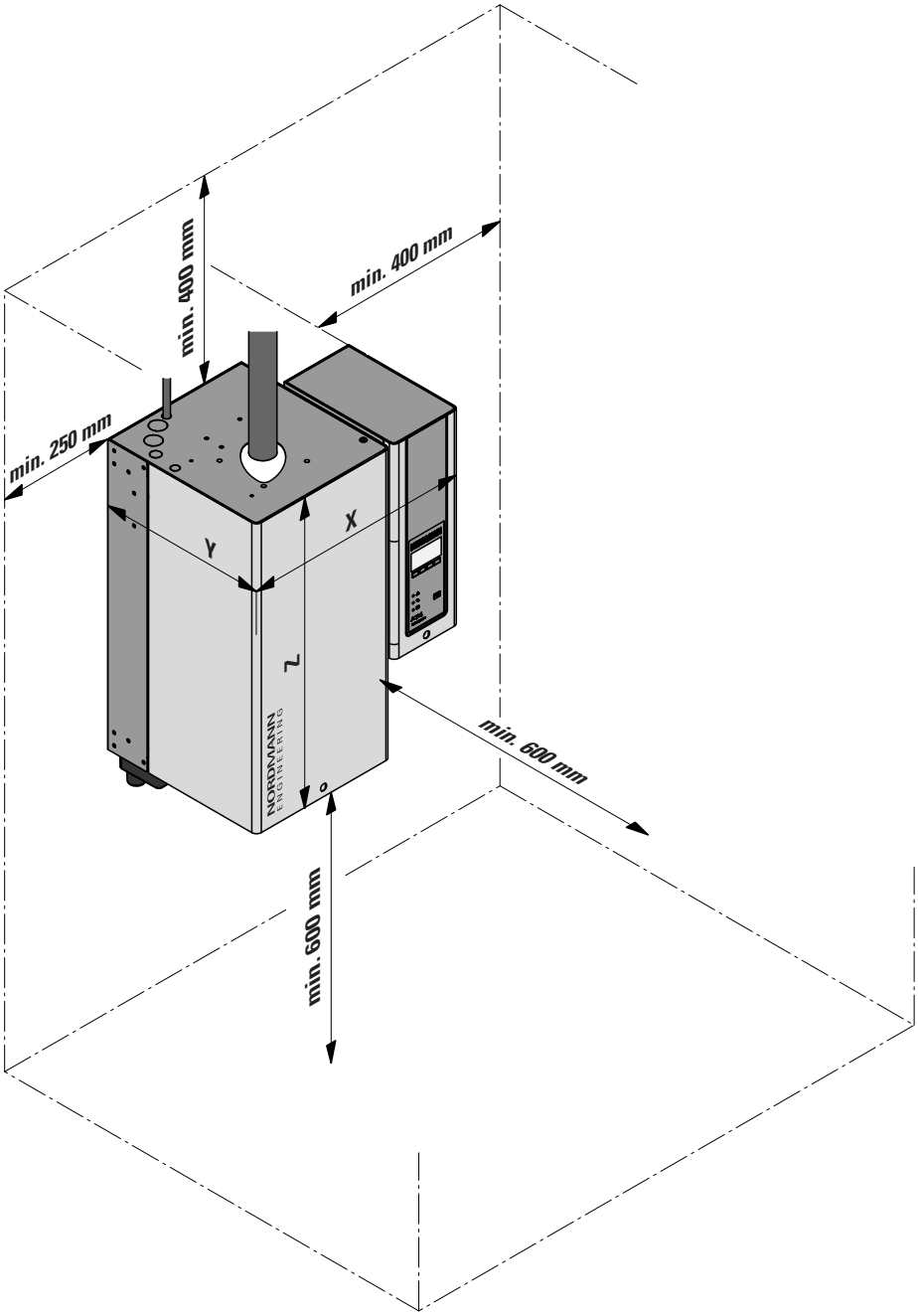

Nordmann AT4 ...		522 524 532 534	822 824 832 834	1532 1534	2362 2364	3262 3264	4564	4662	6462 6464	6564	9064	13064
Dimensions												
Housing dimensions in mm	X	388	388	468	468	563	563	966	966	563	966	966
	Y	255	255	345	345	354	354	354	354	354	354	354
	Z	575	575	620	620	640	640	640	640	640	640	640
Weights												
Net weight in kg		12	12	19	19	28	28	62	62	30	64	64
Operating weight in kg		17	17	29	29	65	65	116	116	67	116	116

The installation site of the steam humidifier depends largely on the location of the steam distributor (see chapter 5.4). To **ensure proper functioning** of the steam humidifier and to **obtain an optimal efficiency**, the following points must be considered and observed when choosing the location for the steam humidifier:

– Install the steam humidifier so that the **length of the steam** hose is kept as short as possible (**max. 4 m**) and that the **minimum bend radius (R= 300 mm)** and **up-slope (20 %)** or **down-slope (5 %)** of the steam hose is observed (see chapter 5.4.5).

– The steam humidifiers Nordmann AT4 are designed for wall-mounting. Make sure that the construction (wall, pillar, floor-mounted console, etc.) to which the humidifiers are to be mounted, offers a **sufficiently high load-bearing capacity** (take notice of the weight information found in the dimensions and weights table above), and is suitable for the installation.

CAUTION!

Do **not** mount the steam humidifier directly to the ventilation duct (insufficient stability).

– The back panel of the Nordmann AT4 is retaining heat during operation (max. surface temperature of the metal housing approx. 60 - 70 °C). Make sure, therefore, that the construction (wall, pillar, etc.) to which the unit is to be mounted, does not consist of heat-sensitive material.

– Install the steam humidifier in such a manner that it is **freely accessible** with sufficient space available for maintenance purposes (refer to the above illustration for minimum distances).

– The Nordmann AT4 is protected according to **IP21**. Make sure the units are installed in a drip-proof location and the admissible ambient conditions are complied with.

– The steam humidifier Nordmann AT4 may only be installed in rooms with a floor drain.

CAUTION!

If for some reason the Nordmann AT4 must be installed in a location without floor drain, it is mandatory to provide a leakage monitoring device to safely interrupt the water supply in case of leakage.

– When fixing the Nordmann AT4 use **only the fixing materials supplied with the unit**. If fixing with the materials supplied is not possible in your particular case, select a method of fixing that is of similar stability.

– The Nordmann ES4 is designed for installation and operation within buildings (admissible temperature range see chapter 6.1). For outdoor operation the Nordmann AT4 must be placed in a weather protective housing. If ambient temperatures near or below the freezing point have to be expected, the protective housing must equipped with a thermostat controlled heating of sufficient capacity. The water supply pipe must be equipped with a trace-heating and must be insulated up to the protective housing.

5.3.2 Mounting the humidifier

Dimension	Unit type		
	522, 524, 532, 534, 822, 824, 832, 834	1532, 1534, 2362, 2364	3262, 3264, 4564, 6564
a	204,0 mm	205.0 mm	205.0 mm
b	40,0 mm	50.0 mm	52.5 mm
c	150,0 mm	210.0 mm	260.0 mm

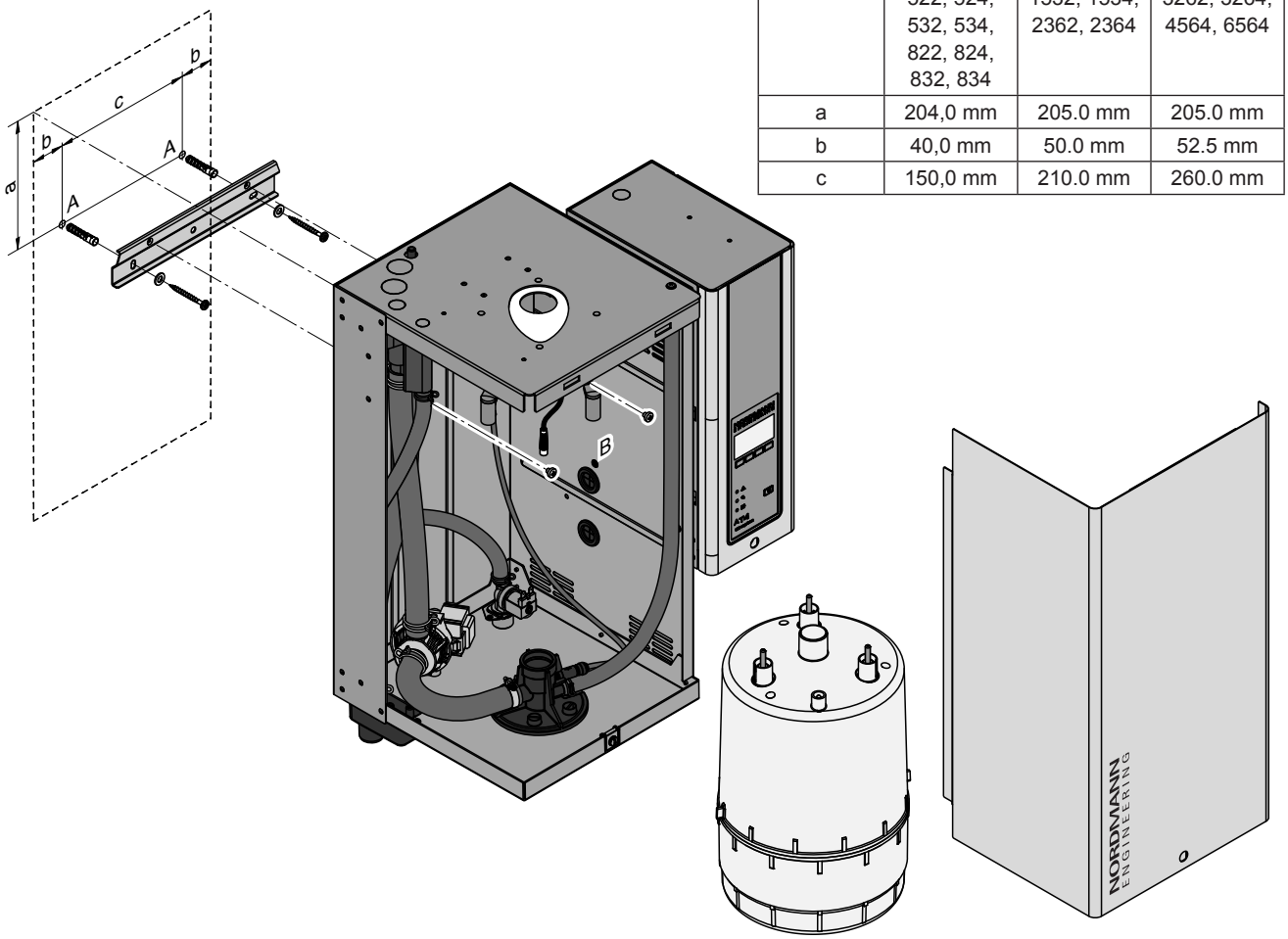

Dimension	Unit type
	4662, 6462, 6464, 9064, 13064
a	203.0 mm
b	43.5 mm
c	258.0 mm
d	181.5 mm

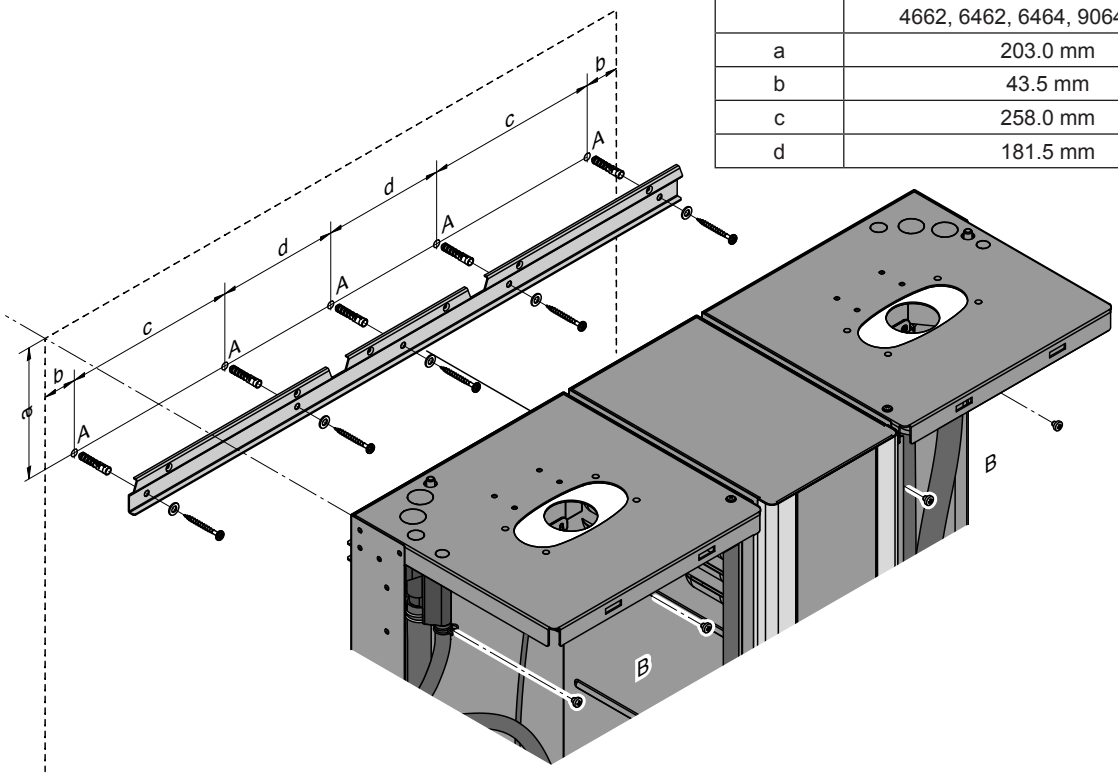

Procedure

1. Mark the attachment points “A” for the wall support at the desired position with the help of a spirit level. Then, drill holes diameter: 8 mm, depth: 40 mm.
2. Insert the supplied plastic plugs, and fix the wall support to the wall with the screws supplied. Before thightening the screws adjust wall support horizontally using a spirit level.
3. Unlock the screw(s) of the front panel(s) (steam side), then remove the front panel(s).
4. Unmount the steam cylinder(s) (see Nordmann AT4 operating instructions chapter 6.3.1).
5. Hang up the unit onto the wall support. Then, fix the unit to the wall support using the supplied screws “B”.
6. Remount the steam cylinder(s) (see Nordmann AT4 operating instructions chapter 6.3.1).
7. Reattach the front panel(s) and secure it with the screw(s).

5.3.3 Inspecting the installed unit

Check the following points:

- ☐ Is the unit installed in the correct place (see chapter 5.3.1)?
- ☐ Is the supporting surface stable enough?
- ☐ Is the unit correctly aligned, vertically and horizontally?
- ☐ Is the unit properly secured (see chapter 5.3.2)?
- ☐ Has/have the front panel(s) of the unit been relocated and correctly fixed with the screw(s)?

5.4 Steam installation

5.4.1 Overview steam installation

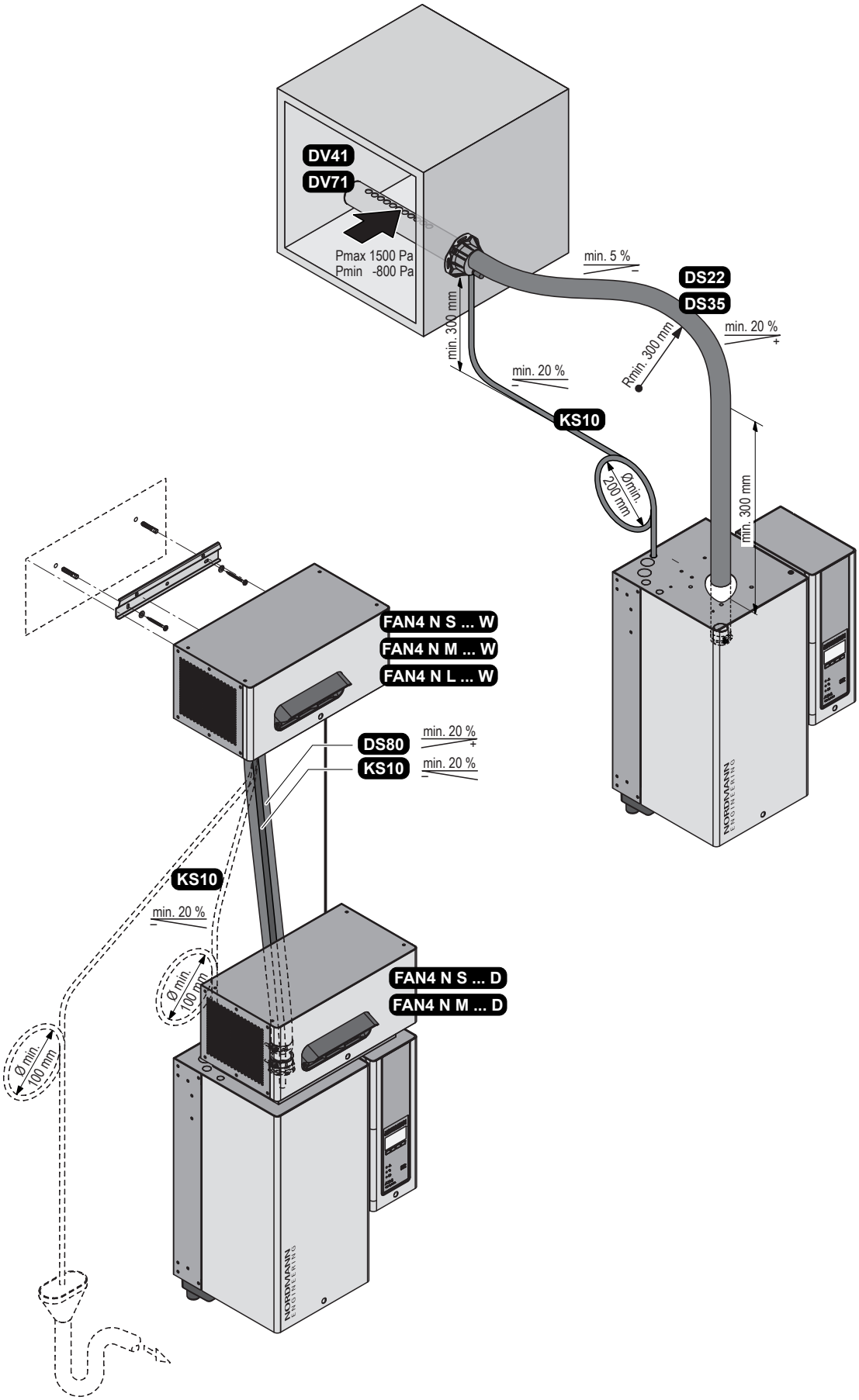

5.4.2 Positioning of the steam distribution pipes

The location for the steam distribution pipes should be determined at the time of dimensioning the air conditioning system. Please note the following instructions to ensure proper humidification of the duct air.

Calculating the humidification distance

The water vapour, emitting from the steam distribution pipes, requires a certain distance to be absorbed by the ambient air so that it is no longer visible as steam. This distance is referred to as **humidification distance "B_N"** and serves as a basis for the determination of the minimum distances from the upstream components in the system.

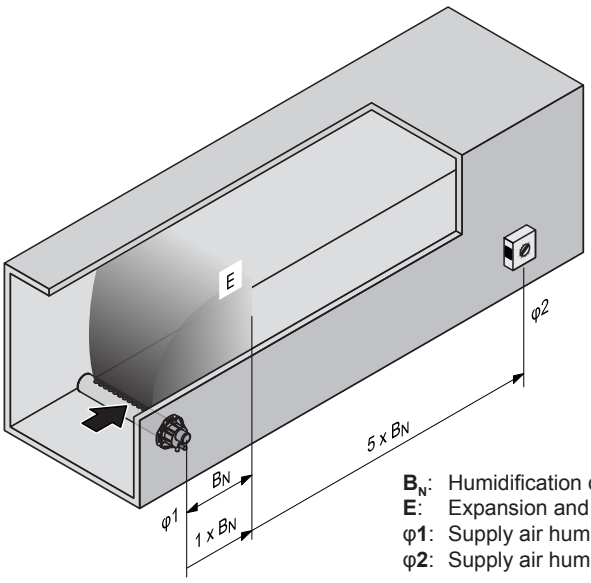

B_N: Humidification distance B_N
E: Expansion and mixing zone
φ**1**: Supply air humidity **before** humidification
φ**2**: Supply air humidity **after** humidification

The calculation of the humidification distance "B_N" is dependent on several factors. For a rough estimation of the humidification distance "B_N", the following table is useful. Recommended standard values listed in this table are based on a supply-air temperature range of 15 °C to 30 °C. The values given in bold type **only apply to steam distribution pipes DV41-... and DV71-...**, the values **in brackets apply to the MultiPipe steam distribution system.**

Humidity at inlet φ1 in %rh	**Length of humidification distance B_N in m Humidity at outlet φ2 in %rh**					
	40	**50**	**60**	**70**	**80**	**90**
5	**0,9** (0,22)	**1,1** (0,28)	**1,4** (0,36)	**1,8** (0,48)	**2,3** (0,66)	**3,5** (1,08)
10	**0,8** (0,20)	**1,0** (0,26)	**1,3** (0,34)	**1,7** (0,45)	**2,2** (0,64)	**3,4** (1,04)
20	**0,7** (0,16)	**0,9** (0,22)	**1,2** (0,30)	**1,5** (0,41)	**2,1** (0,58)	**3,2** (0,96)
30	**0,5** (0,10)	**0,8** (0,17)	**1,0** (0,25)	**1,4** (0,36)	**1,9** (0,52)	**2,9** (0,88)
40	–	**0,5** (0,11)	**0,8** (0,20)	**1,2** (0,30)	**1,7** (0,45)	**2,7** (0,79)
50	–	–	**0,5** (0,13)	**1,0** (0,24)	**1,5** (0,38)	**2,4** (0,69)
60	–	–	–	**0,7** (0,16)	**1,2** (0,30)	**2,1** (0,58)
70	–	–	–	–	**0,8** (0,20)	**1,7** (0,45)

φ1 in %rh: Relative supply air humidity prior to humidification at the lowest supply air temperature
φ2 in %rh: Relative supply air humidity after the steam distribution pipe at maximum capacity

For duct widths <600 mm the humidification distance for the MultiPipe system increases by approx. 50%

Example	
given:	φ1= 30 %rh, φ2= 70 %rh
humidification distance B_N:	**1,4 m** (**0.36 m** for steam distribution system **MultiPipe**)

Note: If the humidification distance has to be reduced for technical reasons, the amount of steam per unit must be divided between **several steam distribution pipes** or the **steam distribution system MultiPipe** must be used. If this is the case, contact your Nordmann supplier.

Minimum distances to be observed

To prevent the water vapour, that is emitting from the steam distribution pipe, from condensing on downstream system components, a minimum distance to the steam distribution pipe must be observed (depends on the humidification distance "B_N").

before/after constriction

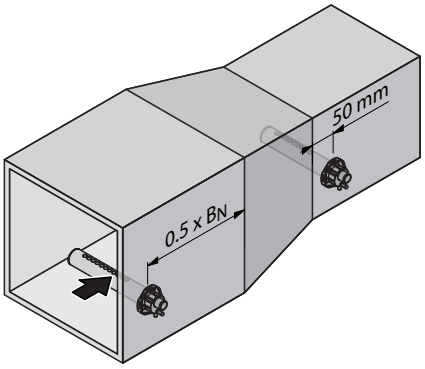

after expansion

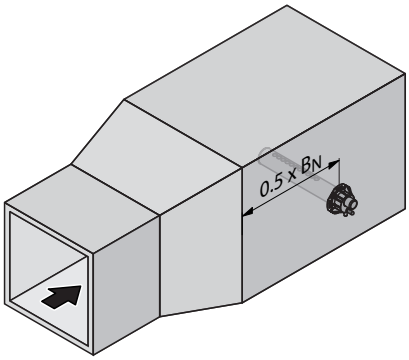

before bend

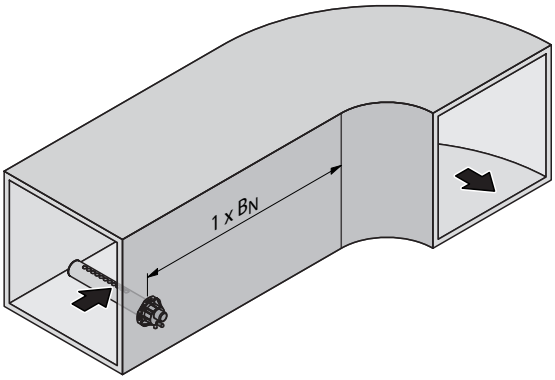

before branch

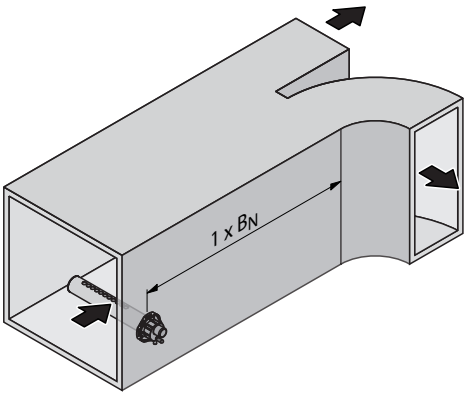

before diffuser

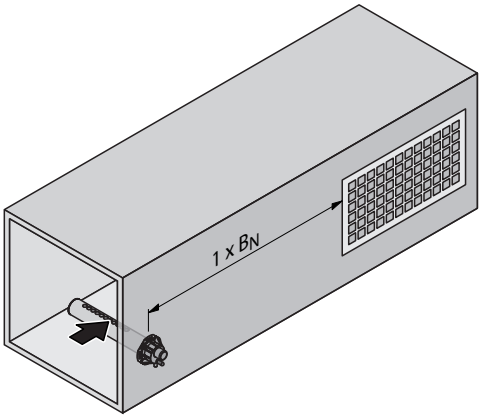

before control sensor

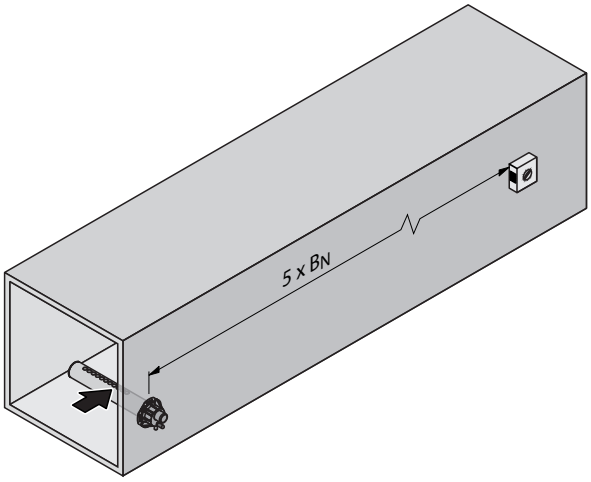

before/after filter/register

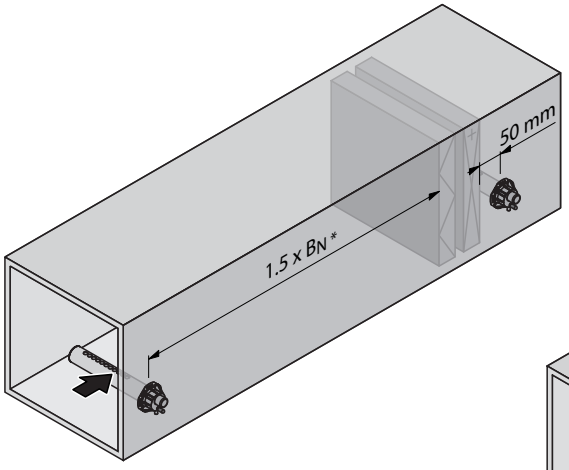

* 2,5 x B_N before aerosol filter

before/after fan, zone exit

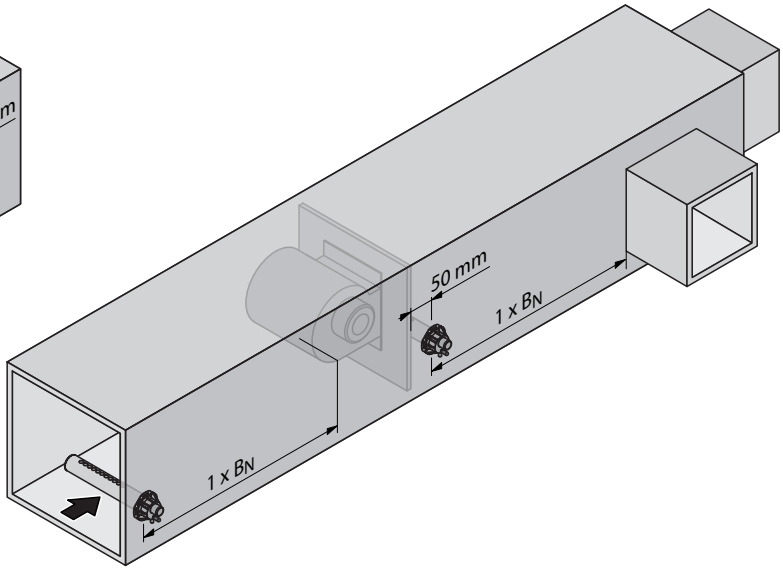

Installation notes and dimensions

The steam distribution pipes are designed for either **horizontal** installation (on the duct wall) or, with accessories, for **vertical** installation (in the duct floor). The **outlet orifices should always point upwards and at right angles to the airflow**.

If possible, the steam distribution pipes should be installed on the **pressure side** of the duct (**max. duct pressure 1500 Pa**). If the steam distribution pipes are installed on the suction side of the duct, the **maximum vacuum must not exceed 800 Pa**.

Select a location for the installation, tailored to suit your duct (see the following illustrations) and position the steam distribution pipes in the duct so that a uniform distribution of steam is achieved.

Positioning the steam distribution pipes in the duct

In positioning the steam distribution pipes, the following dimensions should be observed:

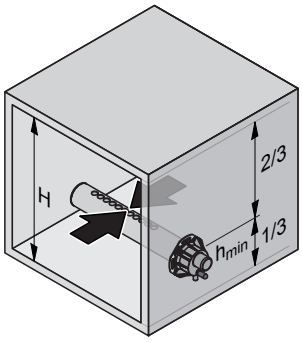

H min.= 250 mm

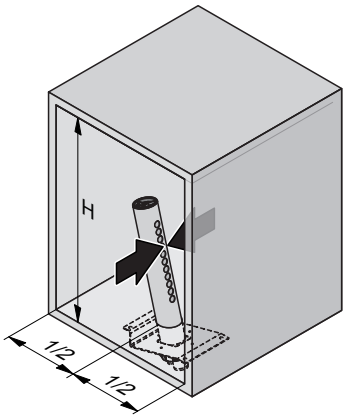

H ≥400 mm

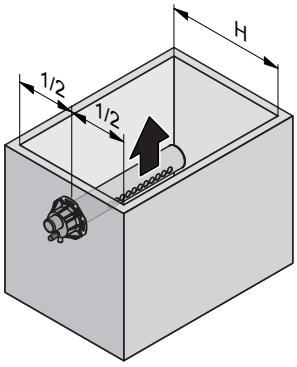

H min.= 200 mm

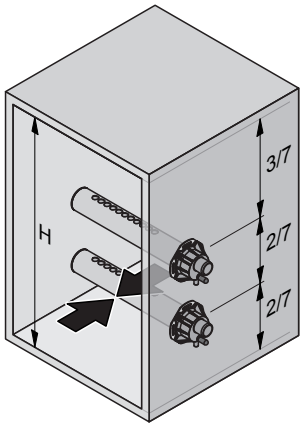

H min.= 400 mm

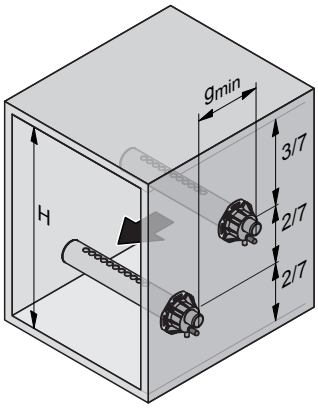

H min.= 350 mm

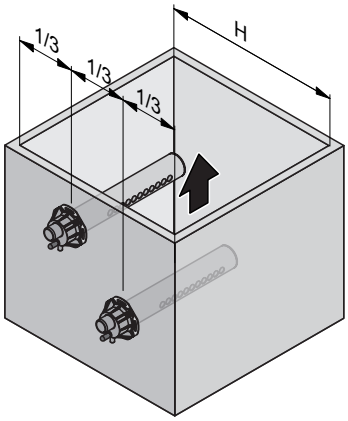

H min.= 300 mm

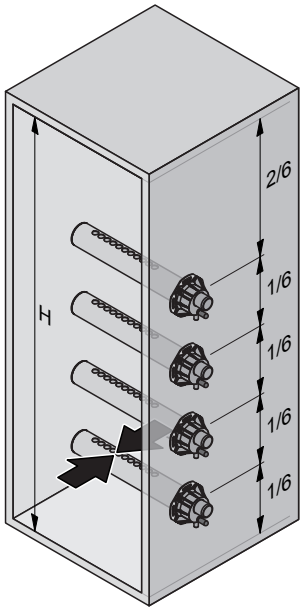

H min.= 720 mm

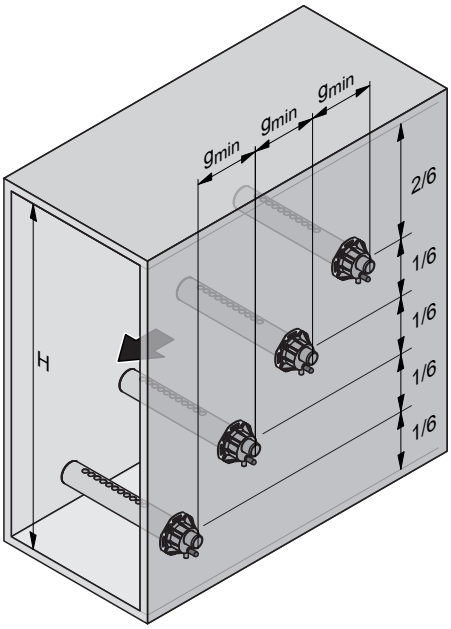

H min.= 600 mm

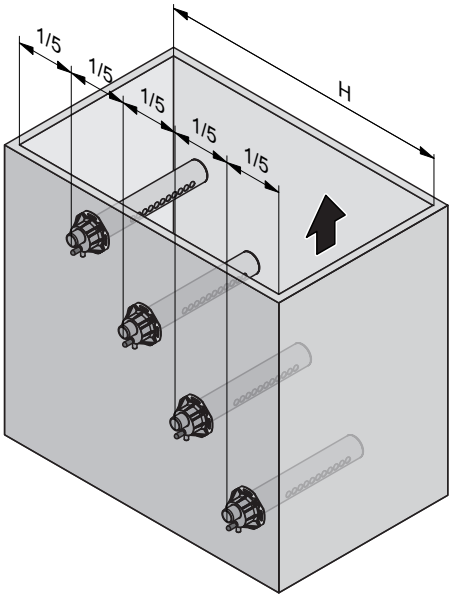

H min.= 500 mm

g min.= 100 mm
h min.= 85 mm

Note: When locating the **MultiPipe** steam distribution system please note the instructions in the separate documentation for this product.

Guidelines for dimensioning the ventilation ducts

- To facilitate the installation of the steam distribution pipes and for control purposes, a sufficiently sized control opening should be planned.
- Within the range of the humidification distance, the ventilation duct should be waterproofed.
- Air ducts passing through cold rooms should be insulated to prevent the humidified air from condensing along the duct wall.
- Poor airflow conditions within the air duct (e.g. caused by obstacles, tight bends, etc.) can lead to condensation of the humidified air.
- Steam distribution pipes must not be mounted to round ducts.

If you have questions relating to the dimensioning of ventilation ducts in combination with steam humidifiers Nordmann AT4, contact your Nordmann supplier.

5.4.3 Installing the steam distributors

Detailed information on the installation of steam distribution pipes DV41-.., DV71-... and MultiPipe steam distribution system can be found in the separate mounting instructions for these products.

5.4.4 Positioning and mounting of the fan units FAN4 N...

Fan unit FAN4 N...

The fan units **FAN4 N S D** and **FAN4 N M D** are **mounted directly on the humidifier.** The fan units **FAN4 N S W**, **FAN4 N M W** und **FAN4 N L W** are mounted separately **above the humidifier to the wall**. To allow the steam coming from the fan unit to spread out evenly, without condensing on obstacles (ceilings, joists, pillars, etc.), the following minimum dimensions must be observed when selecting the location for the fan unit.

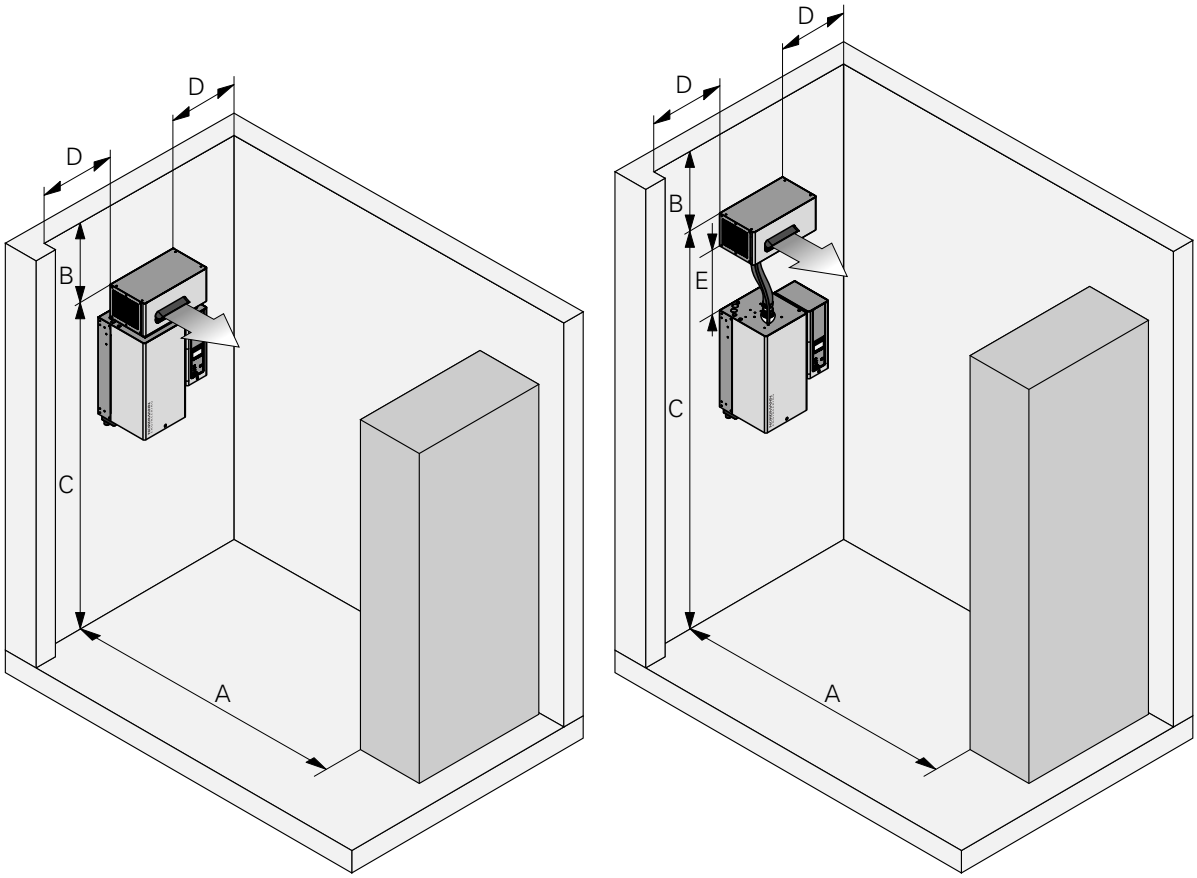

	FAN4 N S W	FAN4 N M W		FAN4 N L W
m_D max.	8 kg/h	15 kg/h	23 kg/h	45 kg/h
A min.	4.0 m	6.0 m	8.0 m	10.0 m
B min.	1.0 m	1.0 m	1.0 m	1.5 m
C approx.	2.2 m	2.2 m	2.2 m	2.2 m
D approx.	1.0 m	1.0 m	1.0 m	1.5 m
E min.	1.0 m			
E max. (max. steam hose length)	4.0 m (recommended: 2.0 m)			

Note: The minimum spaces in the table apply for a room atmosphere of 15 °C and max. 60 %rh. For lower temperatures and/or higher humidity the values should be adjusted accordingly.

Note: In order to achieve a uniform distribution of the humidity within the room, additional factors such as the room size, the room height, etc., must be taken into consideration besides observing the minimum distances for the fan units FAN4 N... If you have questions concerning the direct room humidification, please contact your Nordmann supplier.

Further information is provided in the separate installation and operating instructions for the corresponding fan unit.

5.4.5 *Installing the steam and condensate hose*

Important! Use original steam and condensate hose from your Nordmann supplier exclusively. Other types of hoses can cause undesired operational malfunctions.

Instructions for the hose layout

The hose layout depends on the position of the steam distribution pipe:

– Steam distribution pipe is mounted **more than 500 mm above the top edge of the humidifier**:

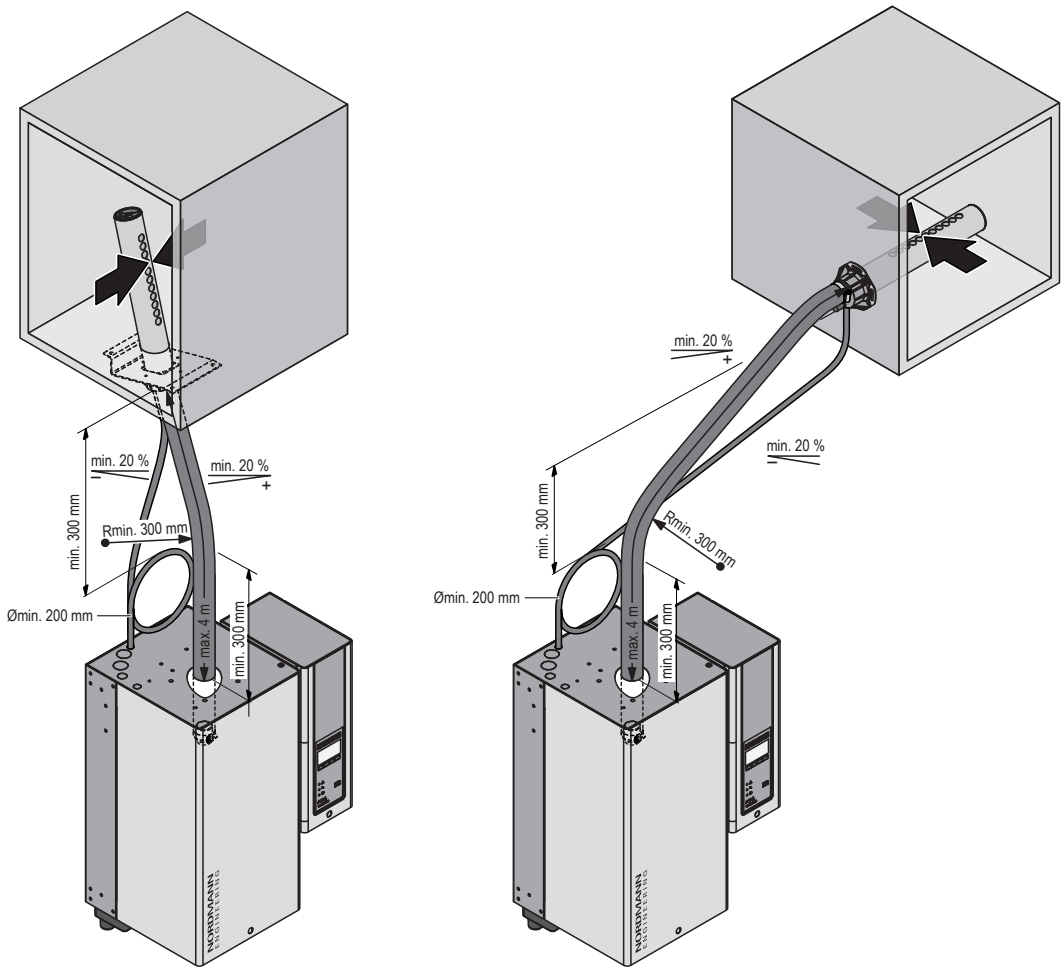

Initially, lead the steam hose with an **upslope of at least 20% over a minimum height of 300 mm**, then lead the hose with a **minimum upslope of 20%** and/or a **minimum downslope of 5%** to the steam distribution pipe.

The condensate hose is led down to the humidifier with a **minimum slope of 20 %**, in the form of a **siphon (min. hose bend diameter Ø200 mm)** and is to be connected to the appropriate connector on top of the unit.
Note: If your unit feeds a number of steam distribution pipes, the individual condensate hoses are to be led into a discharge funnel.
Important! Before putting the unit into operation, the siphon of the condensate hose must be filled with water.

– Steam distribution pipe is mounted **less than 500 mm above the top edge of the humidifier**:

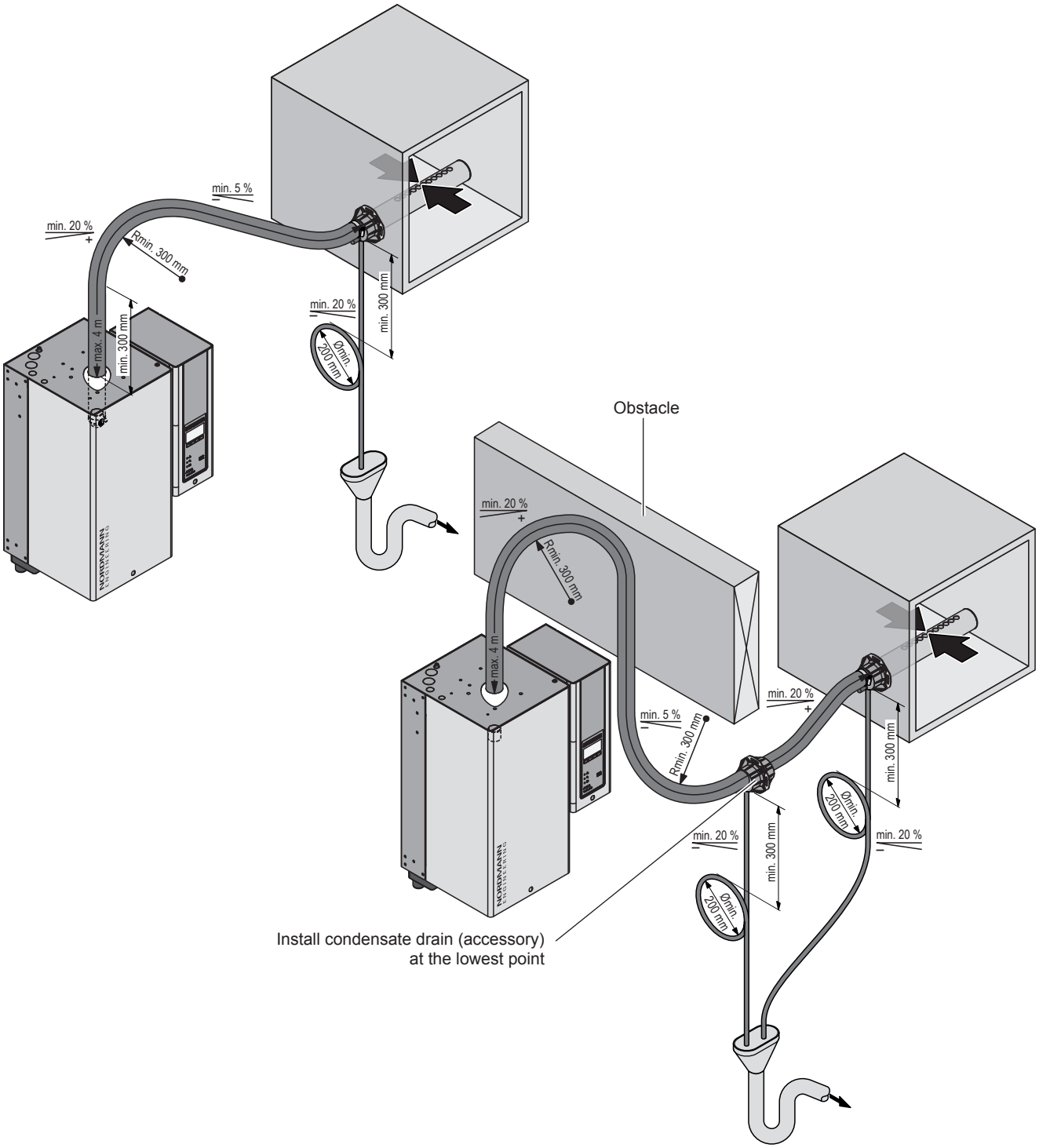

Initially, the steam hose is led with an **upslope of at least 20 % over a minimum height of 300 mm** above the top edge of the humidifier and then down to the steam distribution pipe with a **minimum slope of 5 %**.

The condensate hose is led down with a **minimum slope of 20 %**, in the form of a **siphon (min. hose bend diameter Ø200 mm)**, directly into a discharge funnel.
Important! Before putting the unit into operation, the siphon of the condensate hose must be filled with water.

– The steam hose should be kept as short as possible (**max. 4 m**) while observing the **minimum bend radius of 300 mm**. **Important!** Allowance must be made for a **pressure loss of approx. 100 Pa** per meter steam hose.
  Note: If your particular installation exceeds the maximum steam hose length of 4 m contact your Nordmann representative. In any case, steam hoses longer than 4 m must be insulated in their entire length **(e.g. with insulation hose "EcoTherm")**.
– Reductions in the cross section such as kinks should be avoided throughout the entire length of the hose. The installation of a stop cock in the steam hose is not permissible.
– Steam hoses must be prevented from sagging (condensate pockets); if necessary, support with pipe clamps, trough, or wall brackets, or install a condensate drain in the steam hose.
– **Important!** When deciding on the length and layout of the hose, it should be noted that the steam hose may become somewhat shorter with progressive ageing.
– **Important note regarding the IP protection class**: to meet the IP21 protection class the steam hose lead through on top of the housing must be sealed with commercially available, heat resistant sealant.

Securing the hose

The steam hose must be secured to the steam distribution pipe and humidifier steam outlet by means of **hose clamps**.
Caution! Do not overtighten the hose clamp on the steam connector of the steam humidifier.

Steam line with fixed piping

For steam lines with fixed piping, the same instructions apply to the laying of the piping as already described.

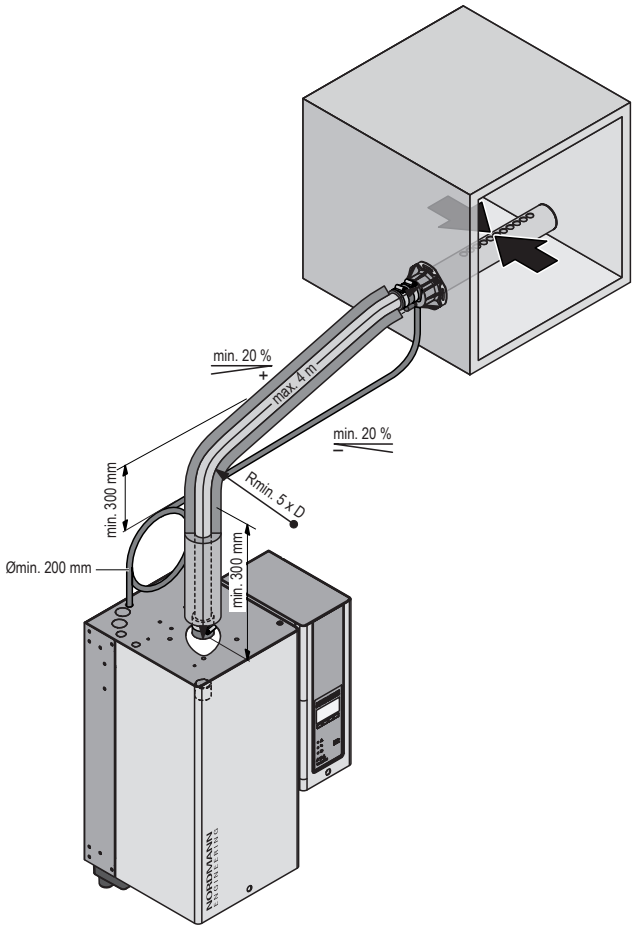

The following additional notes should be observed:

- The **minimum internal diameter of the steam line** (diameter dependent on the steam humidifier) should be applied over the whole length of the piping.
- Use exclusively copper pipe or stainless steel (min. DIN 1.4301).
- To minimize the condensate formation (=loss), the steam pipes must be insulated.
- The **minimum bend radius** for solid pipes is **5 x internal diameter**.
- Connection of the steam pipes to the steam distribution pipe and steam humidifier is effected by means of short lengths of steam hose secured with hose clamps.
- **Important!** Allowance must be made for a **pressure loss of approx. 100 Pa** per meter length or per 90° bend.

5.4.6 Common steam and condensate line errors

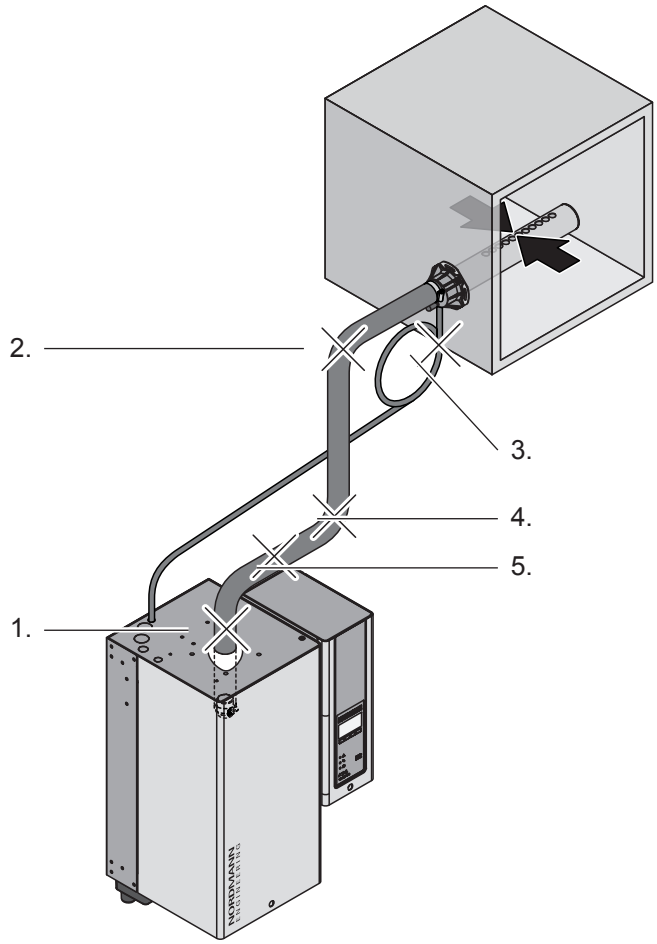

1. Steam hose not led at least 300 mm perpendicularly upwards before first bend.
2. Minimum bend radius of steam hose of 300 mm not maintained (forming of condensate).
3. Siphon of the condensate hose not at least 300 mm below the steam distribution pipe.
4. No condensate drain installed at vertical transition.
5 . Steam hose not sloped (slope min. 20 %).

5.4.7 *Inspecting the steam installation*

Use the following check list to ascertain that the steam installation was performed correctly:

- Steam distributors
  - ☐ Steam distributors (steam distribution pipe or MultiPipe steam distribution system) correctly positioned and secured (screws tightened)?
  - ☐ Are the outlet orifices at right angles to the air flow direction?
- Steam hose
  - ☐ Maximum length of 4 m?
  - ☐ Minimum bend radius of 300 mm (5 x internal diameter with fixed piping)?
  - ☐ Have the instructions for hose positioning been followed?
  - ☐ Steam hose: no sagging (condensate pocket) or condensate drain with siphon (hose bend with a minimum diameter of 200 mm) installed at the lowest point?
  - ☐ Rigid steam lines: properly insulated? Correct installation material used? Minimum internal diameter maintained?
  - ☐ Steam hose(s) securely attached with clamps?
  - ☐ Heat expansion during operation and shortening of the hose with ageing taken into consideration?
  - ☐ Is the lead through of the steam hose on top of the unit sealed (safeguarding of the IP21 protection)?
- Condensate hose
  - ☐ Downslope of at least 20 %?
  - ☐ Siphon (min. ø200 mm) existing and filled with water?
  - ☐ Condensate hose correctly fixed and not kinked?

5.5 Water installation

5.5.1 Overview water installation

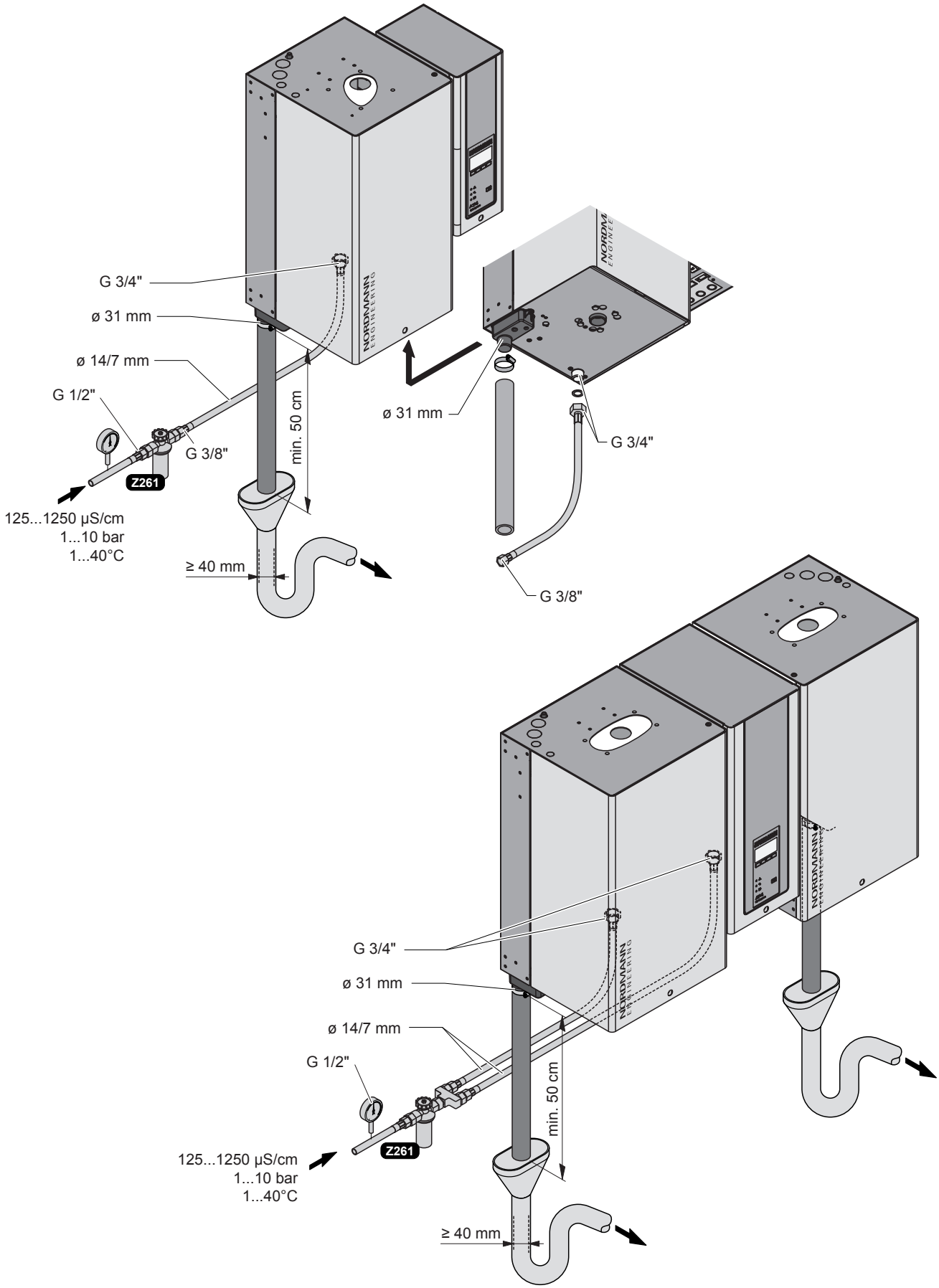

5.5.2 *Notes on water installation*

Water supply

The water supply is to be carried out according to the figure found in chapter 5.5.1 and the applicable local regulations for water installations. The indicated connection specifications must be observed.

- The installation of the **filter valve** (accessory “Z261”, alternatively a shut-off valve and a 5 µm water filter can be used) should be made as close as possible to the steam humidifier.
- Admissible mains pressure **1.0 to 10.0 bar (hammer-free system)**
  For mains pressures >10 bar, the connection must be made via a pressure reducing valve (adjusted to 1.0 bar). For mains pressures <1.0 bar please contact your Nordmann supplier.
- **Notes on water quality**:
  - For the water supply of the Nordmann AT4, use exclusively **untreated drinking water**.
  - The use of **additives** such as corrosion inhibitors, disinfectants, etc. is **not allowed**, since these additives may endanger health and affect proper operation.
  - If the Nordmann AT4 shall be operated with softened or partly softened water, please contact your Nordmann supplier.
- The connection material must be **pressure-proof** and **certified for use in drinking water systems**.
- **Important!** Before connecting the water line**, the line should be well flushed out**.

CAUTION!

The thread at the humidifier connection is made of plastic. To avoid overtightening, the union nut of the water pipe must be **tightened by hand** only.

Water drain

The water drain is to be carried out according to the figure found in chapter 5.5.1 and the applicable local regulations for water installations. The indicated connection specifications must be observed.

- Make sure that the drain pipe is correctly fixed and easily accessible for inspections and cleaning purposes.
- The draining temperature is: **80…90 °C**. Use temperature-resistant installation materials only!
- The two drain hoses of a double unit must be led into separate funnels with siphon.

5.5.3 *Inspecting the water installation*

Check the following topics:

– Water supply

  ☐ Has filter valve (accessory “Z261”) or shut-off valve and 5 µm water filter respectively been installed in supply line?

  ☐ Have admissible water pressure (1 – 10 bar) and admissible temperature (1 – 40 °C) been observed?

  ☐ Does the supply capacity match the humidifier and is the minimum inside diameter of the supply pipe maintained throughout the entire length?

  ☐ Are all components and pipes properly secured and are all threaded connections securely tightened?

  ☐ Is the water system properly sealed?

  ☐ Does the water supply installation meet the requirements of the local regulations for water installations?

– Water drain

  ☐ Is the minimum inside diameter of the drain pipe of 40 mm maintained throughout the entire length?

  ☐ Has drain pipe been installed with a downslope of at least 10 %?

  ☐ Has the heat resistance of the material used been verified to be at least 100 °C?

  ☐ Is the drain hose properly secured (hose clamps at unit connection tightened)?

  ☐ Does the water drain installation meet the requirements of the local regulations for water installations?

5.6 Electric installation

5.6.1 Wiring diagram Nordmann AT4 single units

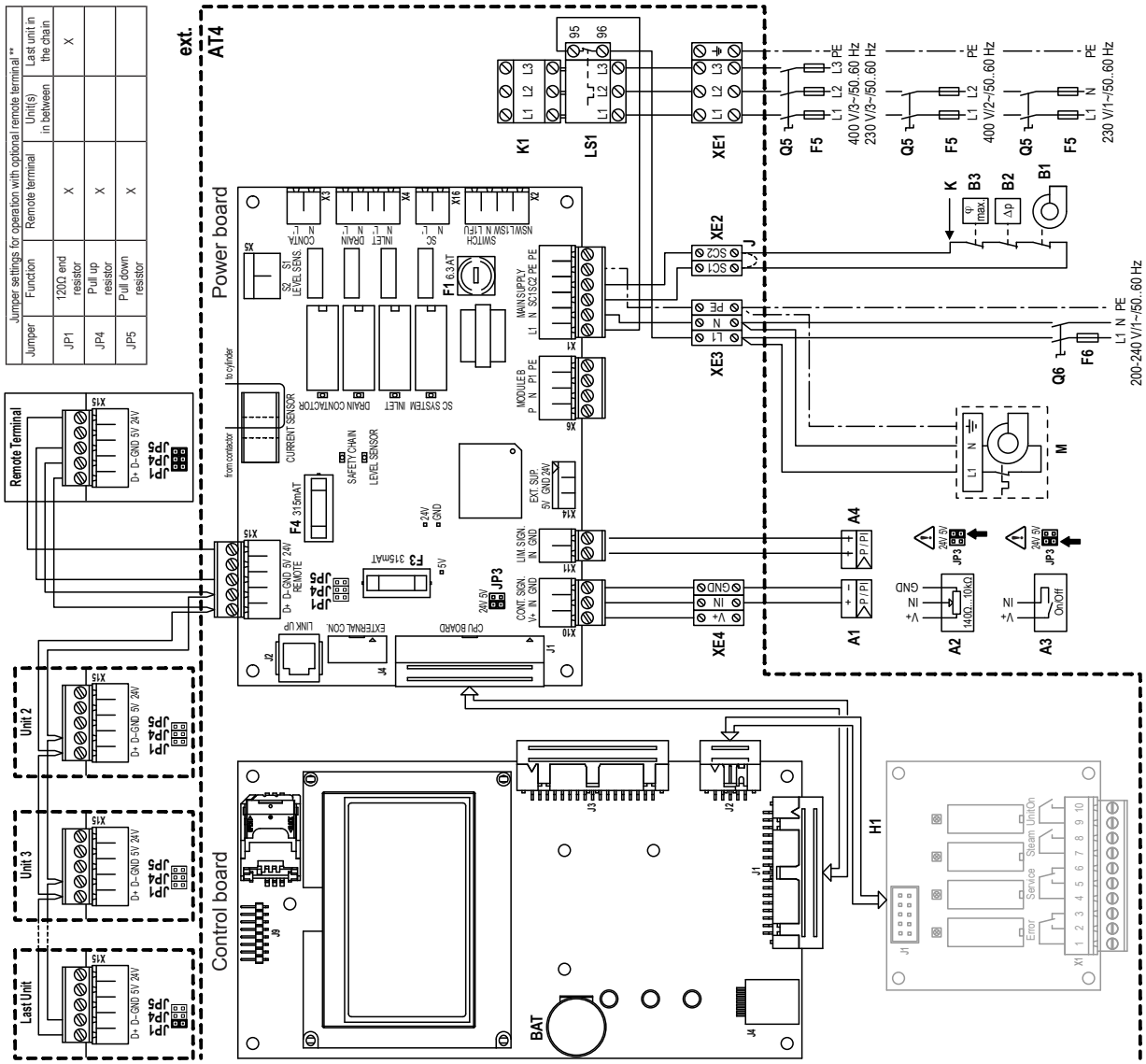

A1 Continuous controller (active) or humidity sensor
A2 Controller (passive), set jumper on JP3-5V
A3 On/Off controller, set jumper on JP3-24V
A4 Limitation signal
BAT Backup battery (CR2032, Lithium 3V)
B1 Ventilation interlock
B2 Safety humidistat
B3 Airflow monitor
F1 Internal fuse "Power board" (6.3 A, slow acting)
F3 Internal fuse "Power board" control signal (315 mA, slow acting)
F4 Internal fuse "Power board" 24 VDC supply (V+) (315 mA, slow acting)
F5 External fuse heating voltage supply
F6 External fuse control voltage supply
H1 Remote operating and fault indication (option "RFI")
J Short circuited, if no external monitoring devices are connected
J2 Link Up system "Power board"
JP1 End resistor Remote Terminal **
JP3 Jumper control signal
JP4 Pull up resistor Remote Terminal **
JP5 Pull down resistor Remote Terminal **
K External safety chain (230V/5A)
K1 Main contactor
LS1 Thermal relay
M Fan unit
Q5 External service switch heating voltage supply
Q6 External service switch control voltage supply
XE1 Connection terminal heating voltage
XE2 Connection terminal safety chain
XE3 Connection terminal control voltage
XE4 Connection terminal control signal Y
X15 Connection terminal remote panel

5.6.2 Wiring diagram Nordmann AT4 double units

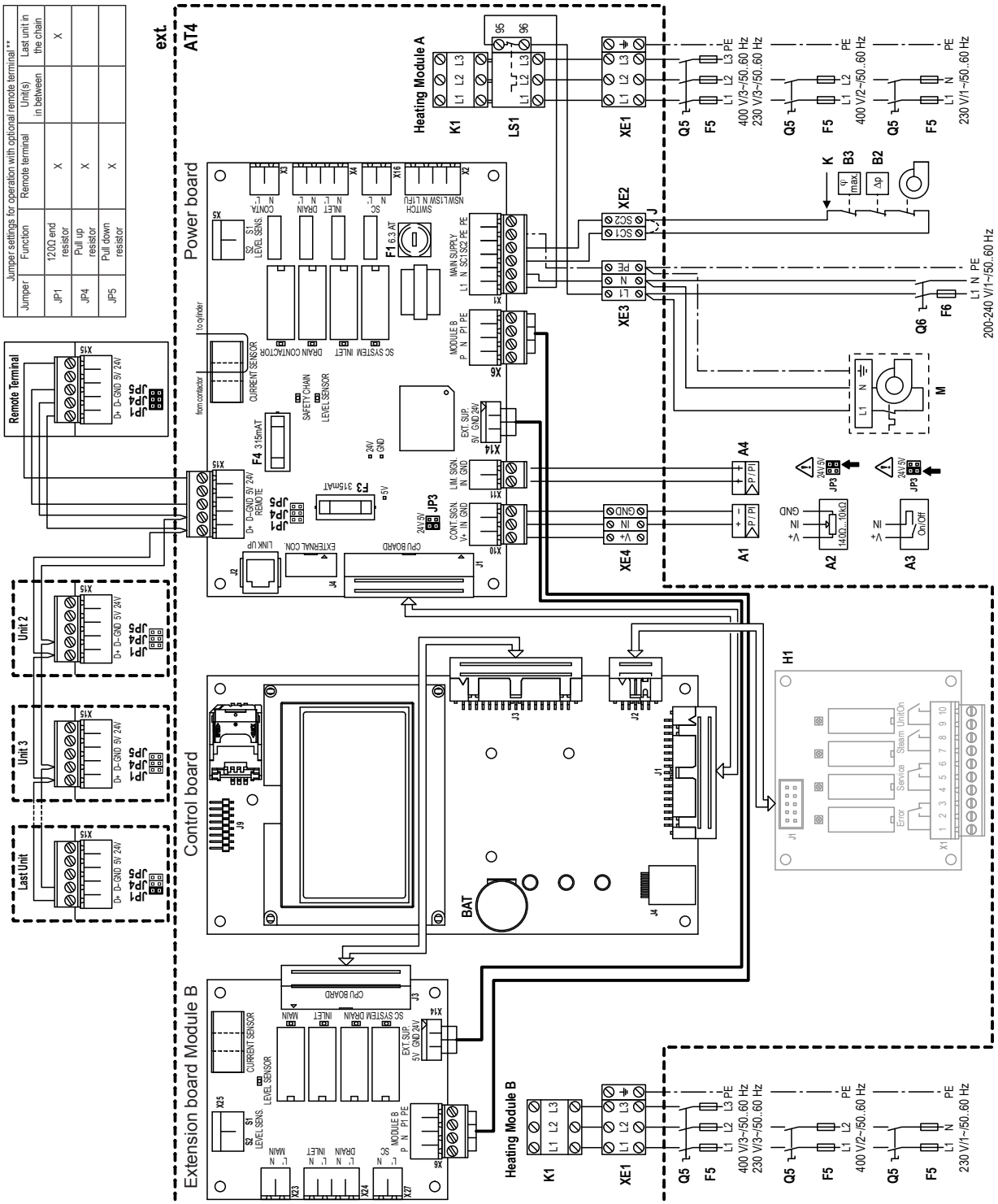

A1 Continuous controller (active) or humidity sensor
A2 Controller (passive), set jumper on JP3-5V
A3 On/Off controller, set jumper on JP3-24V
A4 Limitation signal
BAT Backup battery (CR2032, Lithium 3V)
B1 Ventilation interlock
B2 Safety humidistat
B3 Airflow monitor
F1 Internal fuse "Power board" (6.3 A, slow acting)
F3 Internal fuse "Power board" control signal (315 mA, slow acting)
F4 Internal fuse "Power board" 24 VDC supply (V+) (315 mA, slow acting)
F5 External fuse heating voltage supply
F6 External fuse control voltage supply
H1 Remote operating and fault indication (option "RFI")
J Short circuited, if no external monitoring devices are connected
J2 Link Up system "Power board"
JP1 End resistor Remote Terminal **
JP3 Jumper control signal
JP4 Pull up resistor Remote Terminal **
JP5 Pull down resistor Remote Terminal **
K External safety chain (230V/5A)
K1 Main contactor
LS1 Thermal relay
M Fan unit
Q5 External service switch heating voltage supply
Q6 External service switch control voltage supply
XE1 Connection terminal heating voltage
XE2 Connection terminal safety chain
XE3 Connection terminal control voltage
XE4 Connection terminal control signal Y
X6 Connection to extension board Module B
X14 Voltage supply extension board
X15 Connection terminal remote panel

5.6.3 Notes on electric installation

Important notes

- The electric installation must be carried out according to the wiring diagram in chapter 5.6.1, the notes on electric installation as well as the applicable local regulations. All information given in the wiring diagram must be followed and observed.
- All cables must be lead into the unit via the cable openings equipped with cable glands (e.g. option “CG-cable gland”). The cable for the heating voltage supply must be lead into the unit from the bottom via the cable opening equipped with the clamp strap. Fix the cable with the clamp strap.
- Make sure the cables do not scrub on any components or become a stumbling trap.
- Maximum cable length and required cross section per wire must be observed.
- The supply voltages must match the respective voltages (heating and control voltage) stated in the wiring diagram.

Heating voltage supply

CAUTION!

Before connecting, ensure that the mains voltage corresponds with the **heating voltage for the unit** (see type plate).

The connection to the heating voltage is made in accordance with the wiring diagram, to the **terminal block "XE1"** in the control compartment. The customer is to install a **service switch "Q5"** (disconnecting device with a minimum contact opening of 3 mm is an essential requirement) and a **fuse group "F5"** (essential requirement, fuses are to be as detailed in the following table) in the supply line. The supply wiring is to be fed into the unit via the clamp strap on the bottom of the unit.
Note: Double units have separate heating voltage supplies for each cylinder.

Heating voltage	Max. steam capacity [kg/h]	Nordmann AT4 ..	Nominal power [kW]	Nominal current [A]	Main fuses F5 [A]
400V3 (400 V/3~/50...60 Hz)	5	534	3,8	5,4	3x 10
	8	834	6,0	8,7	3x 16
	15	1534	11,3	16,2	3x 20
	23	2364	17,3	24,9	3x 35
	32	3264	24,0	34,6	3x 50
	45	4564	33,8	48,7	3x 63
	64	6464	2x 24,0	2x 34,6	2x (3x 50)
	65	6564	48,8	70,4	3x 100
	90	9064	2x 33,8	2x 48,7	2x (3x 63)
	130	13064	2x 48,8	2x 70,4	2x (3x100)
400V2 (400 V/2~/50...60 Hz)	5	524	3,8	9,4	2x 16
	8	824	6,0	15,0	2x 20
230V3 (230 V/3~/50...60 Hz)	5	532	3,8	9,4	3x 16
	8	832	6,0	15,1	3x 20
	15	1532	11,3	28,2	3x 35
	23	2362	17,3	43,3	3x 63
	32	3262	24,0	60,2	3x 80
	46	4662	2x 17,3	2x 43,3	2x (3x 63)
	64	6462	2x 24,0	2x 60,2	2x (3x 80)
230V1 (230V/1~/50...60Hz)	5	522	3,8	16,3	25
	8	822	6,0	26,1	35

The cross-section of the mains cable must comply with the applicable local regulations.

Control voltage supply

CAUTION!

- Before connecting, ensure that the mains voltage corresponds with the **control voltage of the unit (200-240 V/1~/50…60 Hz).**
- The humidifier must only be connected to a **mains supply with a protective conductor**.

The connection to the control voltage is made in accordance with the wiring diagram, to the **terminal block "XE3"** in the control compartment. The customer is to install a **service switch "Q6"** (all pole disconnecting device with a minimum contact opening of 3 mm) and a **"F6" fuse (max. 10 A slow acting)** in the supply line (these are both essential requirements).

The cross-section of the mains cable must comply with the applicable local regulations (minimum of 1.5 mm^2).

External safety circuit

To guarantee the safety of the humidification system, monitoring the operation by means of a safety circuit is an absolute requirement.

To accomplish this, the **potential-free contacts (max. contact loading 250V/5A)** of external monitoring devices (e.g. safety high limit humidistat, airflow monitor, ventilation interlock, etc.) are **connected in series to the contacts "SC1" and "SC2" of the terminal block "XE2"** in accordance with the wiring diagram.

DANGER!
Danger of electric hazard!

Mains voltage is connected to terminal block "XE2" (up to 240 V). The steam humidifier must therefore be isolated from the mains supply (heating and control voltage), before starting the connection work.

If, for whatever reason, no external monitoring devices are connected, a connecting bridge "J" must be installed on the contacts "SC1" and "SC2" of the terminal block "XE2".

Do not apply any **extraneous voltage** to the terminals.

The cross-section of the cable must comply with the applicable local regulations (minimum of 1 mm^2).

Remote operating and fault indication H1 (Option “RFI”)

The optional remote operating and fault indication PCB is to be connected via a flat ribbon cable to the corresponding connector on the control board. The optional remote operating and fault indication PCB contains four potential-free relay contacts for the connection of the following operating and fault indications:

– “Error”: This relay is activated if an error is present.
– “Service”: This relay is activated when the set service interval has expired.
– “Steam”: This relay closes as soon as the unit produces steam.
– “Unit On”: This relay closes as soon as the unit is switched on via the main switch.

The **maximum contact loading** is **250V/8A**.

Appropriate suppressor modules are to be used for the switching of relays and miniature contactors.

Control signal (Y)

– **External continuous humidity controller or humidity sensor (A1)**
An external continuous humidity controller or a humidity sensor (operation with internal P/PI controller) is to be connected to the contacts “IN” (+) and “GND” (–) of the terminal block “XE4” in the control compartment.
Note: the control signal must be set via the control software of the humidifier. The admissible control signals are stated in the technical data.

– **Ohmic humidity controller (passive)**
An ohmic humidity controller (140Ω...10kΩ) is to be connected to the contacts “V+”, “IN” and “GND” of the terminal block “XE4” in the control compartment.
Note: for the ohmic humidity controller a jumper must be set on “JP3-5V”.

– **24 VDC On/Off humidistat (passive)**
An 24 VDC On/Off humidistat is to be connected to the contacts “V+” and “IN” of the terminal block “XE4” in the control compartment.
Note: for the 24 VDC On/Off control a jumper must be set on “JP3-24V”.

Air supply limit signal (signal Z)

– **External air supply limiter (A4)**
An external air supply limiter (P/PI humidity controller) is to be connected to the contacts “IN” (+) and “GND” (–) of the terminal plug “X11” on the power board.
Note: the air supply limiter must be activated and configured via the control software of the humidifier. The admissible limit signals are stated in the technical data.

Connection of the fan units FAN4 N...

See separate documentation of the corresponding fan unit.

Connection of the remote terminal (Option RP)

The optional remote terminal is to be connected via a four-wire cable to the corresponding contacts of terminal block X15 on the power board of one of the humidifiers.

Addtional humidifiers (max. 8) to be remote controlled are connected in series via the contacts “D+” und “D–” of terminal block X15 to the humidifier connected to the remote terminal using a two-wire cable.

The maximun cable length between the units is 50 m. Cable section 0.5 mm².

The termination of the remote terminal bus is established via the jumpers JP1, JP4 and JP5 on the power boards of the remote terminal and the connected humidifiers (see table below).

Jumper settings for operation with optional remote terminal				
Jumper	Function	Remote terminal	Unit(s) in between	Last unit in the chain
JP1	120Ω end resistor	X		X
JP4	Pull up resistor	X		
JP5	Pull down resistor	X		

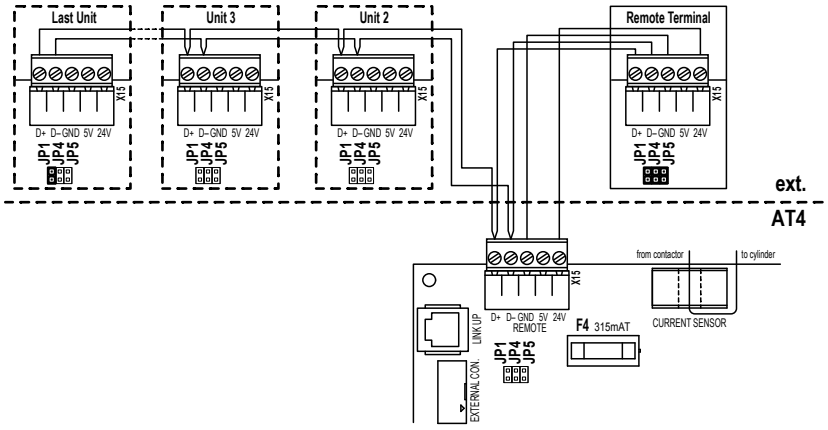

Internal control voltage supply via option CVI or option Trafo

– Option **CVI** (mains supply **with neutral lead**):

  For mains voltages of 400 V/3~/50...60 Hz, 400 V/2~/50...60 Hz and 230 V/3~/50...60 Hz. The option CVI is connected according to the following wiring diagram.

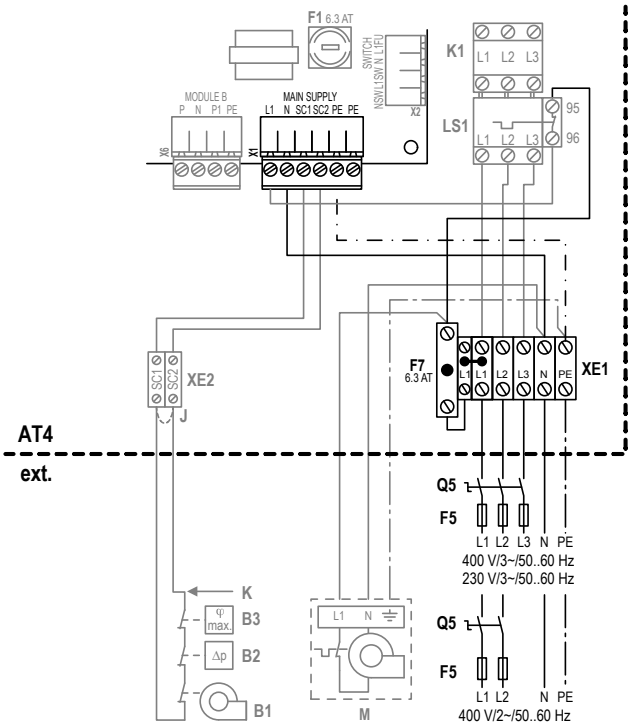

– Option **Trafo** (mains supply **without neutral lead**):

For mains voltages of 400 V/3~/50...60 Hz and 400 V/2~/50...60 Hz. The option Trafo is connected according to the following wiring diagram.

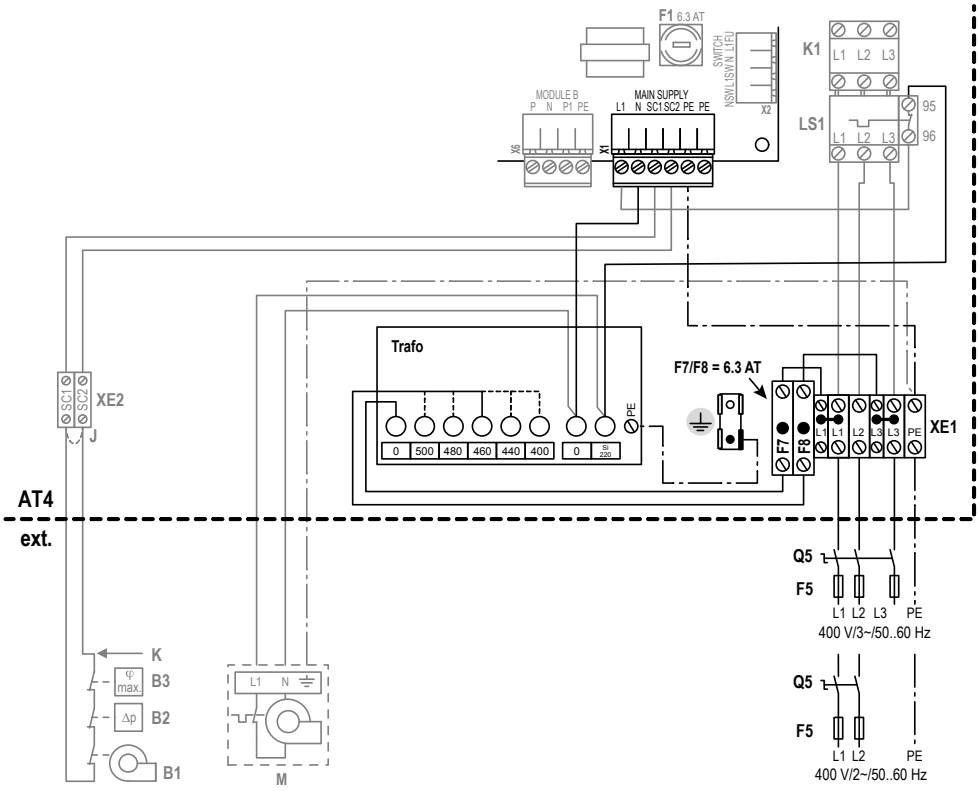

5.6.4 *Inspecting the electrical installation*

Check the following points:

- ☐ Do the supply voltages for heating and control comply with the relevant voltages given in the wiring diagram?
- ☐ Is the correct CF Card inserted?
- ☐ Are the voltage supplies (heating and control voltage) correctly fused?
- ☐ Are the service switches “Q..” installed in the supply lines for to the heating and control voltage?
- ☐ Are all components correctly connected according to the wiring diagram?
- ☐ Are all connecting cables fastened?
- ☐ Are the connecting cables free of tension (passed through cable glands?)
- ☐ Does the electric installation meet the applicable local regulations for electric installations?
- ☐ Is the unit reassembled correctly and the front panel fixed with the screw?

6 Product specifications

6.1 Technical data

Steam capacity in kg/h	**5**	**8**	**15**	**23**	**32**	**45**	**46**	**64**	**65**	**90**	**130**
Capacity range in kg/h	**1...5**	**1.6...8**	**3...15**	**4,6...23**	**6,4...32**	**9...45**	**9,2...46**	**12,8...64**	**13...65**	**18...90**	**26...130**
Nominal power in kW	**3.8**	**6.0**	**11.3**	**17.3**	**24.0**	**33.8**	**2x 17.3**	**2x 24.0**	**48.8**	**2x 33.8**	**2x 48.8**
Number of steam cylinder	**1**	**1**	**1**	**1**	**1**	**1**	**2**	**2**	**1**	**2**	**2**

Heating voltage 230V/1~/50..60Hz *											
Unit model	**522**	**822**									
Nominal current in A	16,3	26,1									
Steam cylinder type **	522A	822A									
Heating voltage 400V/2~/50..60Hz *											
Unit model	**524**	**824**									
Nominal current in A	9,4	15,0									
Steam cylinder type **	524A	824A									
Heating voltage 230V/3~/50..60Hz *											
Unit model	**532**	**832**	**1532**	**2362**	**3262**		**4662**	**6462**			
Nominal current in A	9,4	15,1	28,2	43,3	60,2		2x 43,3	2x 60,2			
Steam cylinder type **	532A	832A	1532A	2362A	3262A		2x 2362A	2x 3262A			
Heating voltage 400V/3~/50..60Hz *											
Unit model	**534**	**834**	**1534**	**2364**	**3264**	**4564**		**6464**	**6564**	**9064**	**13064**
Nominal current in A	5,4	8,7	16,2	24,9	34,6	48,7		2x 34,6	70,4	2x 48,7	2x 70,4
Steam cylinder type **	534A	834A	1534A	2364A	3264A	4564A		2x 3264A	6564A	2x 4564A	2x 6564A
Steam cylinder type ***	534A-L	834A-L	1534A-L	2364A-L	3264A-L	4564A-L		2x 3264A-L	---	2x 4564A-L	---
Control voltage	200-240 V/1~/50..60 Hz										
Operating conditions											
Admissible water pressure	1...10 bar										
Water quality	Untreated drinking water with a conductivity of 125...1250 µS/cm										
Admissible water temperature	1...40 °C										
Admissible ambient temperature	1...40 °C										
Admissible ambient humidity	max. 75 %rH (non-condensing)										
Admissible duct air pressure	-0.8 kPa...1.5 kPa; overpressure kit (option) up to 10.0 kPa										
Type of protection	IP21										
Conformity	CE, VDE, GOST										
Dimensions/Weights											
Width in mm	388	388	468	468	563	563	966	966	563	966	966
Height in mm	575	575	620	620	640	640	640	640	640	640	640
Depth in mm	255	255	345	345	354	354	354	354	354	354	354
Net weight in kg	12		19		28		62		30	64	
Operating weight in kg	17		29		65		116		67	116	
Water supply connector	G 3/4" (male thread)										
Water drain connector	ø 31 mm (outside diameter)										
Steam connector	1xø 22		1xø 35			2x ø 35				4xø 35	
Options											
Cable gland	1xCG						2xCG		1xCG	2xCG	
Overpressure set	1xOPS						2xOPS		1xOPS	2xOPS	
Remote operating and fault indication	1xRFI										
Steam hose connector with condensate trap	1xCT..					2xCT..				4xCT..	
Internal control voltage supply	1xS-CVI			1xM-CVI					1xL-CVI		
Transformer 400V/230V	Trafo										
@Link AT4	@Link AT4										
Accessories											
Filter valve	1x Z261										
Nordmann AT4 Remote Terminal	RP										
Steam distribution pipe	1xDV41-...		1xDV71-...			2xDV71-...				4xDV71-...	
Steam distribution system MultiPipe	——		System 1			System 2				System 4	
Fan unit	1x FAN4 N S D or FAN4 N S W		1x FAN4 N M D or FAN4 N M W		1x FAN4 N L W	1x or 2x FAN4 N L W	2x FAN4 N L W			4x FAN4 N L W	
Steam hose / meter	DS22 or DS80 (FAN4 N...)		DS35 or DS80 (FAN4 N...)								
Condensate hose / meter	KS10										
EcoTherm insulation hose	ECT22 (DS22) or ECT80 (DS80)		ECT60 (DS35) or ECT80 (DS80)								
Duct humidistat	NHD										
Room humidistat	NHR										
Humidity sensor for duct mounting	NDC										
Humidity sensor for room mounting	NRC										

* Other heating voltages on request
** Steam cylinder for water conductivity from 125 to 1250 µS/cm (standard version)
*** Steam cylinder for low water conductivity from 80 to 125 µS/cm

6.2 Unit dimensions

Nordmann AT4 5../8.. (Dimensions in mm)

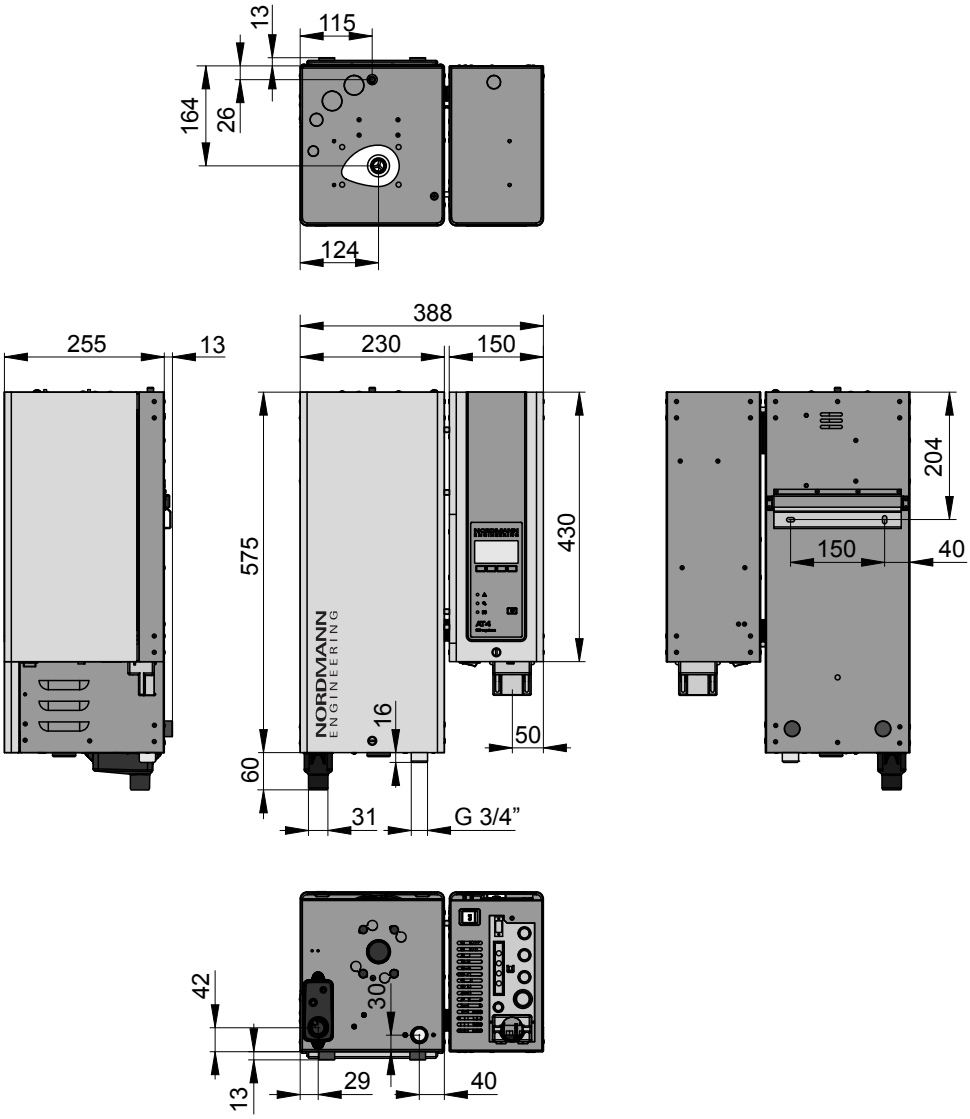

Nordmann AT4 15../23.. (Dimensions in mm)

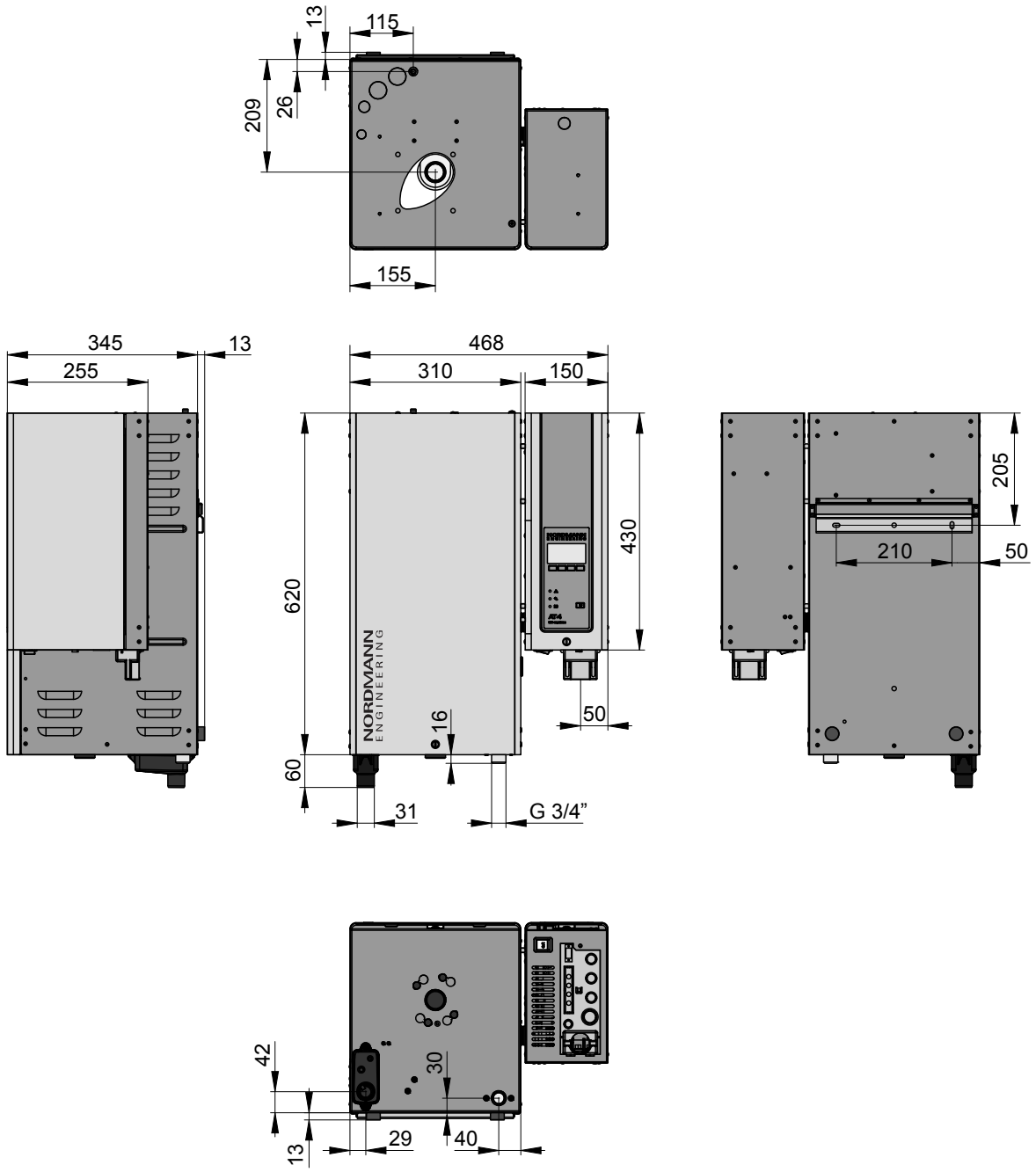

Nordmann AT4 32../4564/6564 (Dimensions in mm)

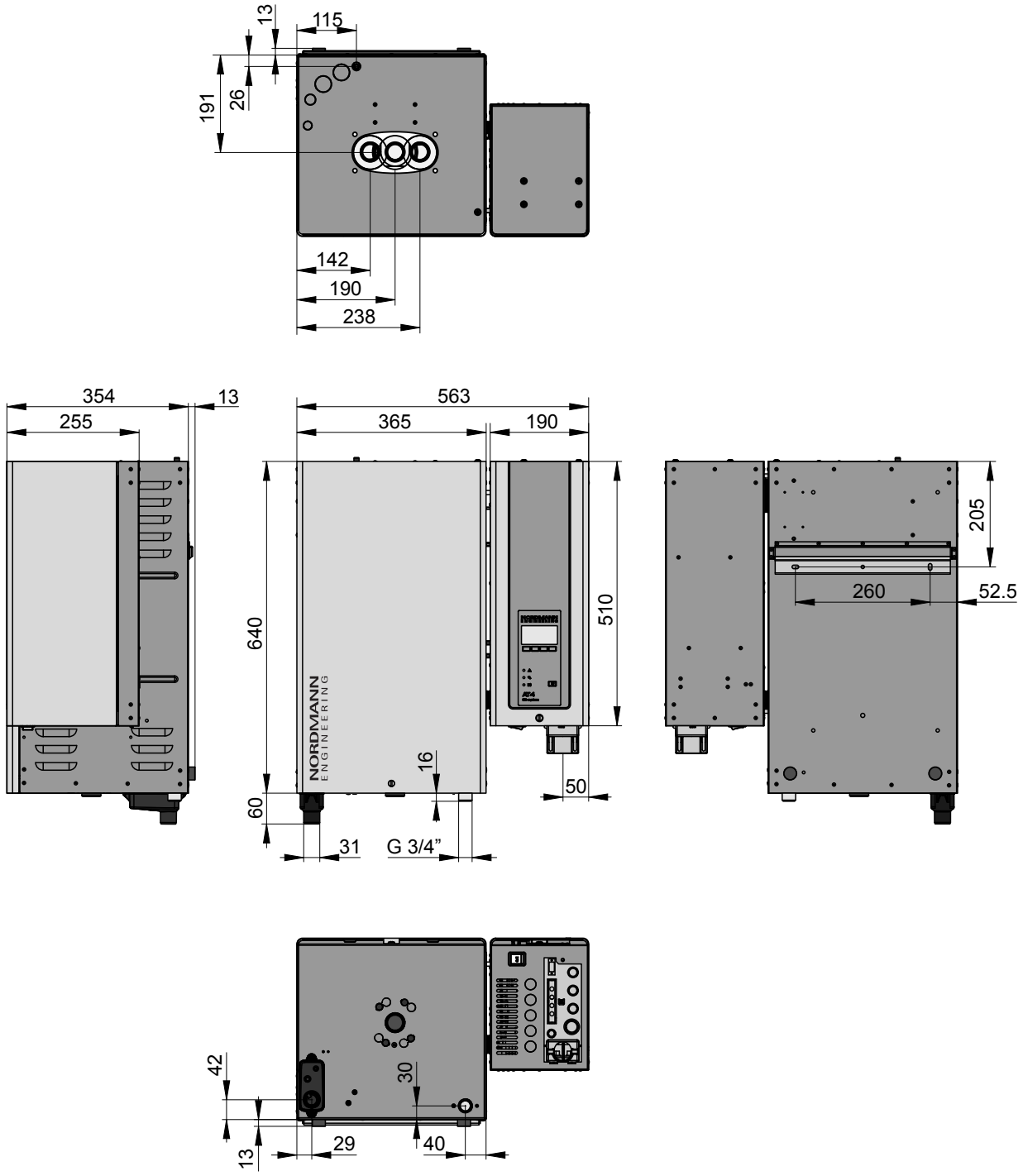

Nordmann AT4 4662/6462/6464/9064/13064 (Dimensions in mm)

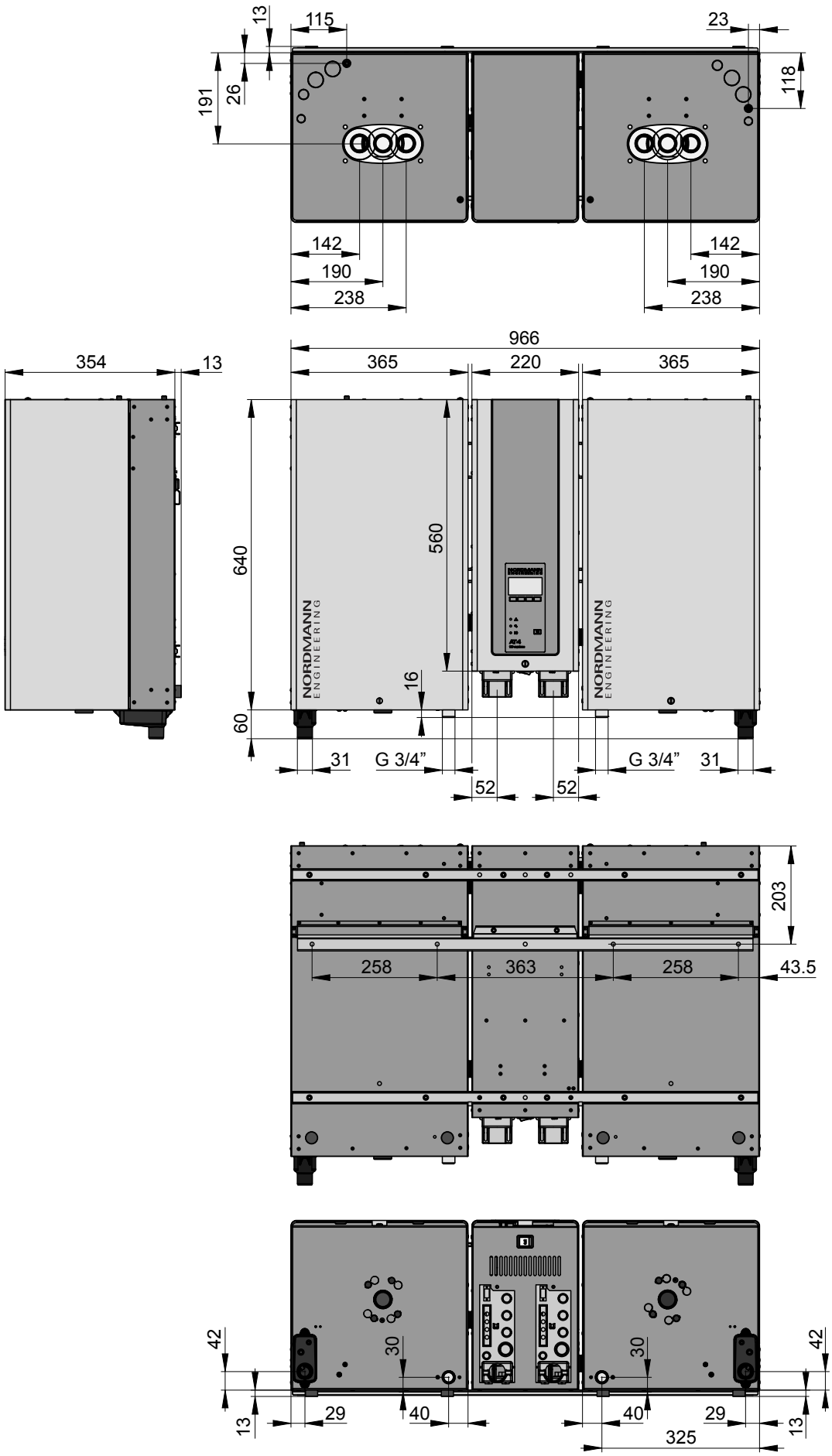

Notes

Notes

CH94/0002.00

Condair Group AG
Gwattstrasse 17, 8808 Pfäffikon SZ, Switzerland
Phone +41 55 416 61 11, Fax +41 55 588 00 07
info@condair.com, www.condairgroup.com